40025/DIM
BORCHIA MAMBA
Design Emiliana Martinelli

martinelli luce

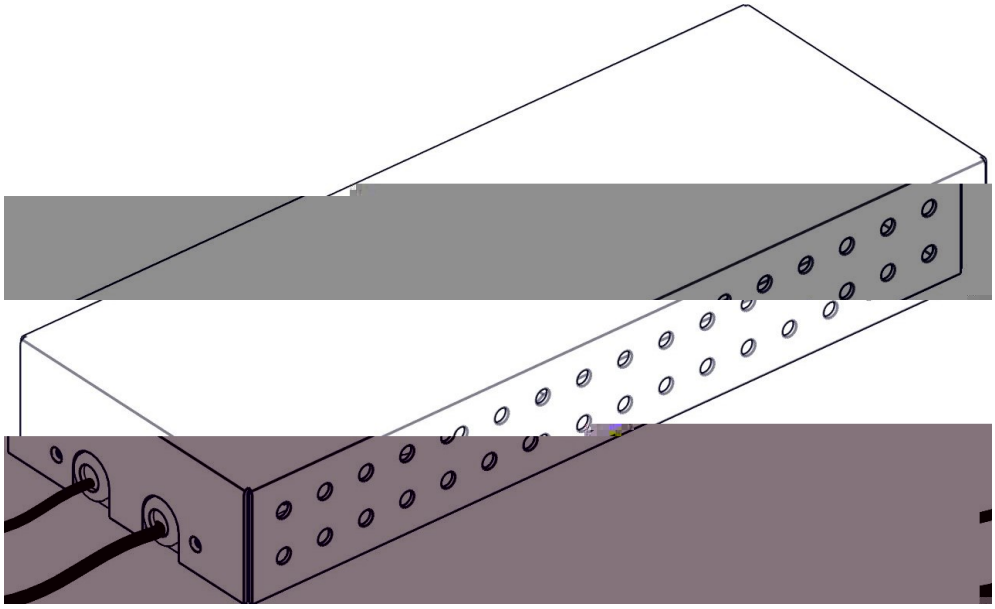

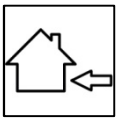

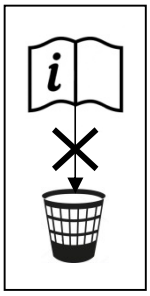

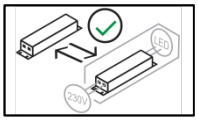

D

D

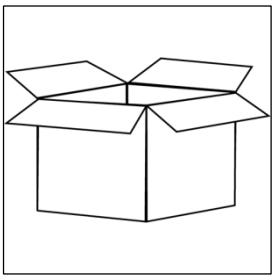

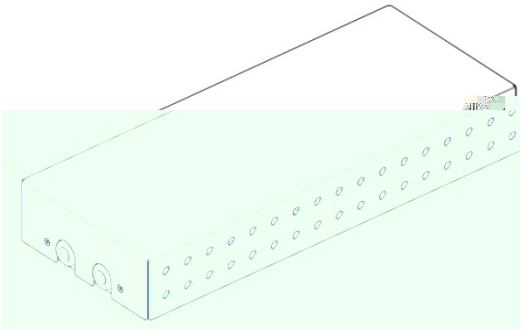

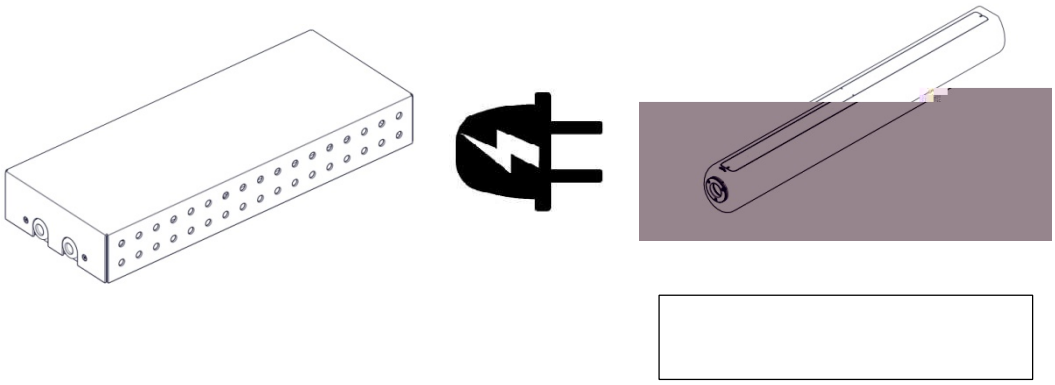

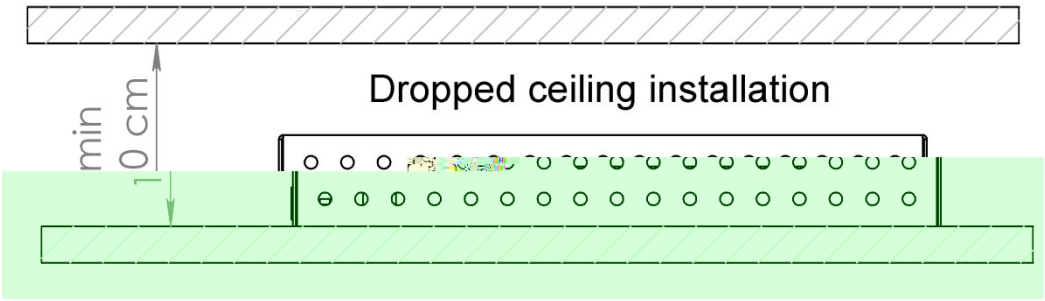
Dropped ceiling installation
min
10 cm

1

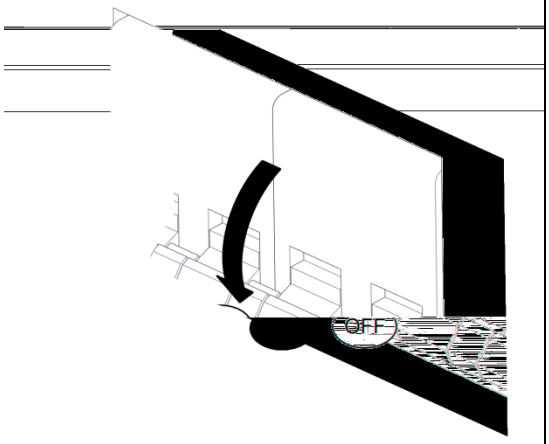

2

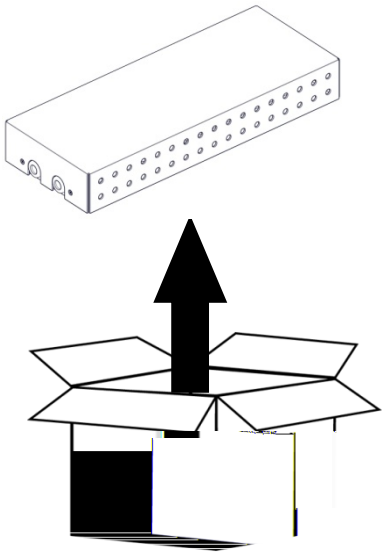

3

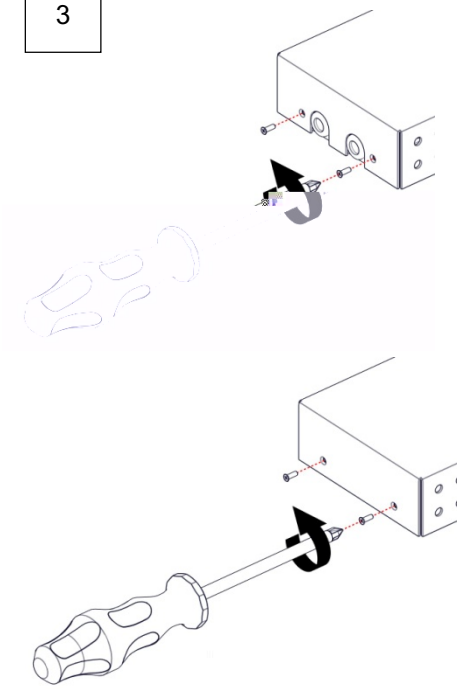

4

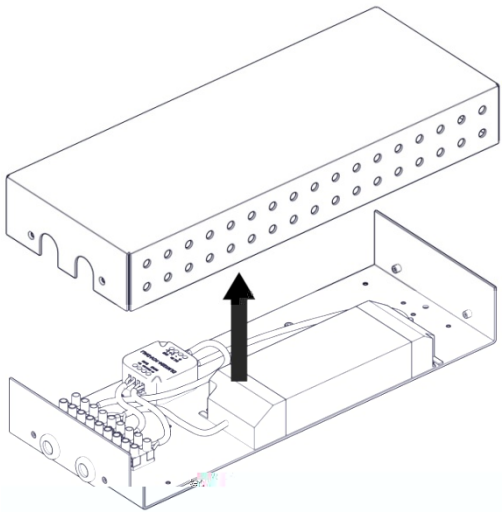

9

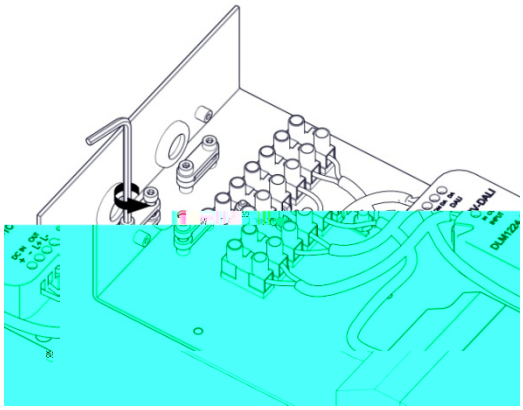

10

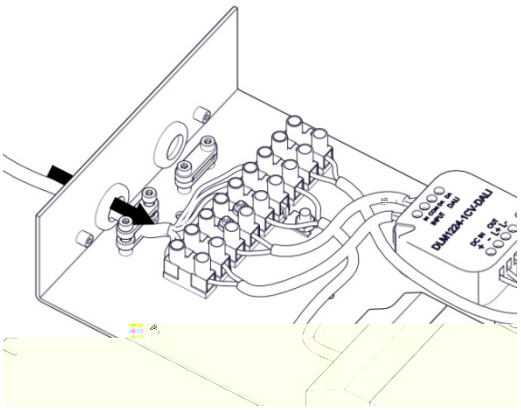

11

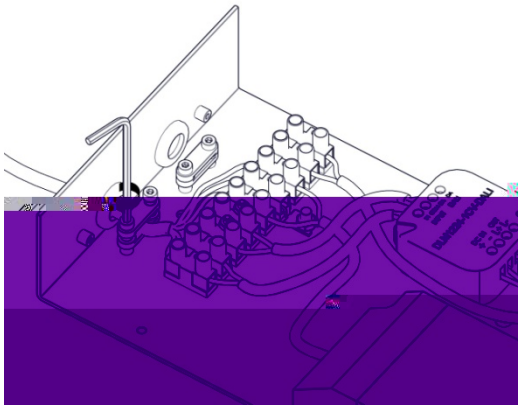

12

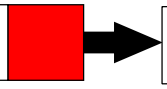

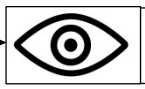

13

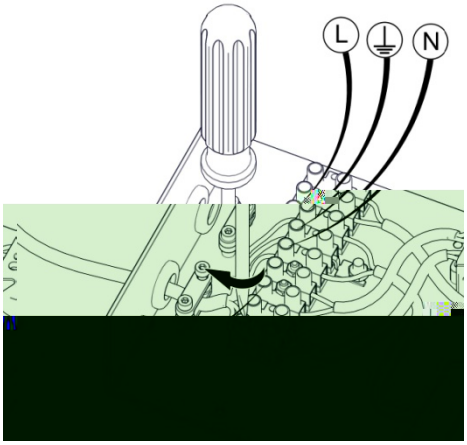

13

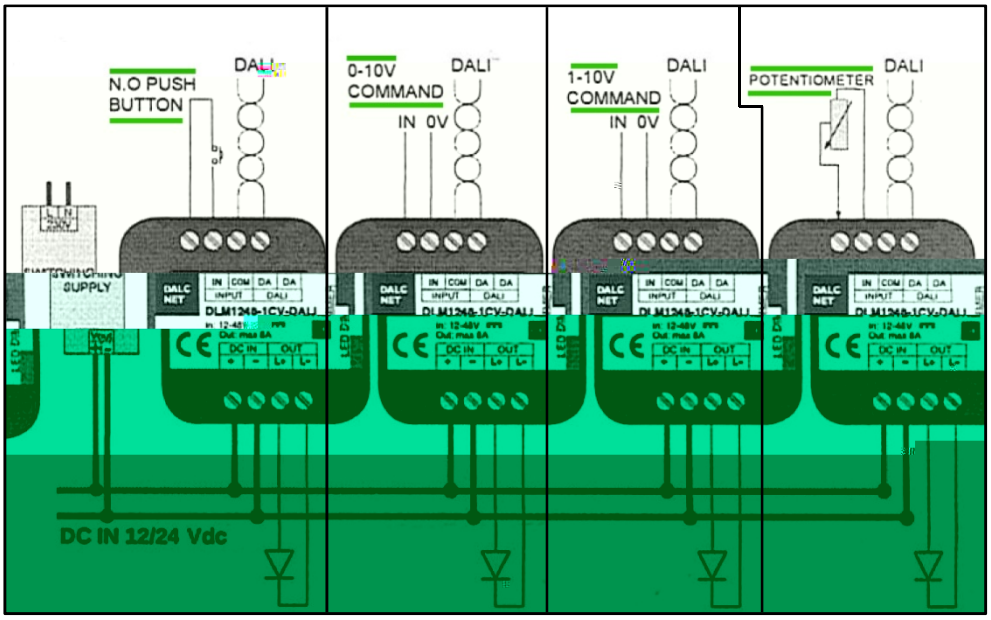
N.O PUSH
BUTTON
DALI
0-10V
COMMAND
IN 0V
DALI
1-10V
COMMAND
IN 0V
DALI
POTENTIOMETER
DALI
SUPPLY
DALC
NET
IN COM DA DA
INPUT DALI
DLM1248-1CV-DALI
DC IN
OUT
DC IN 12/24 Vdc

14

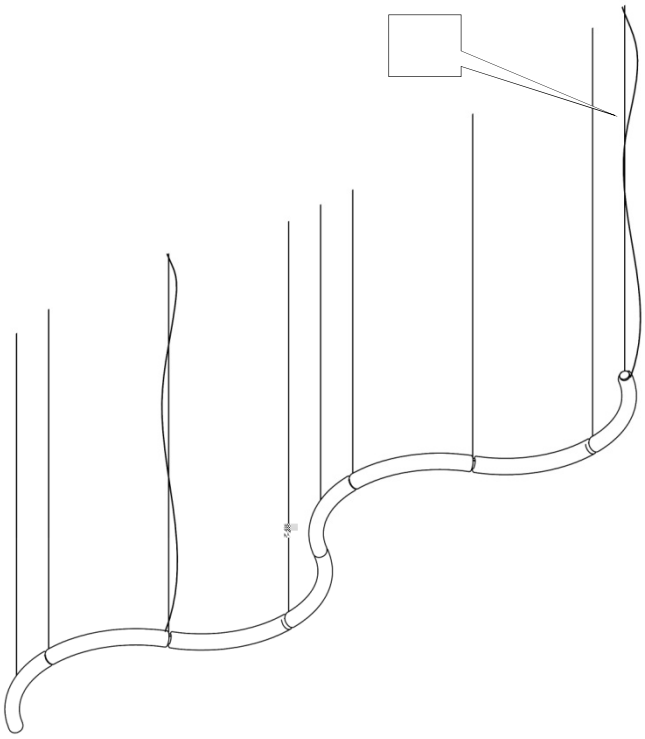

15

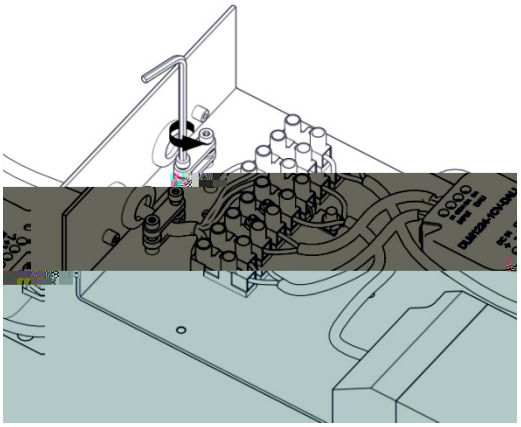

16

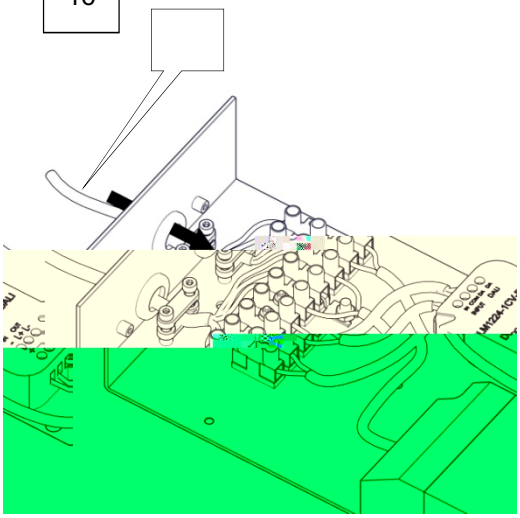

17

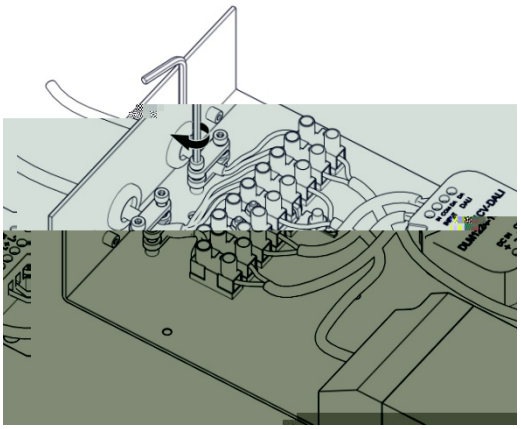

18

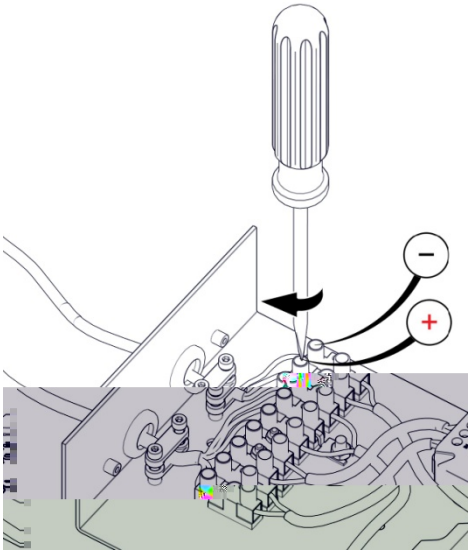

19

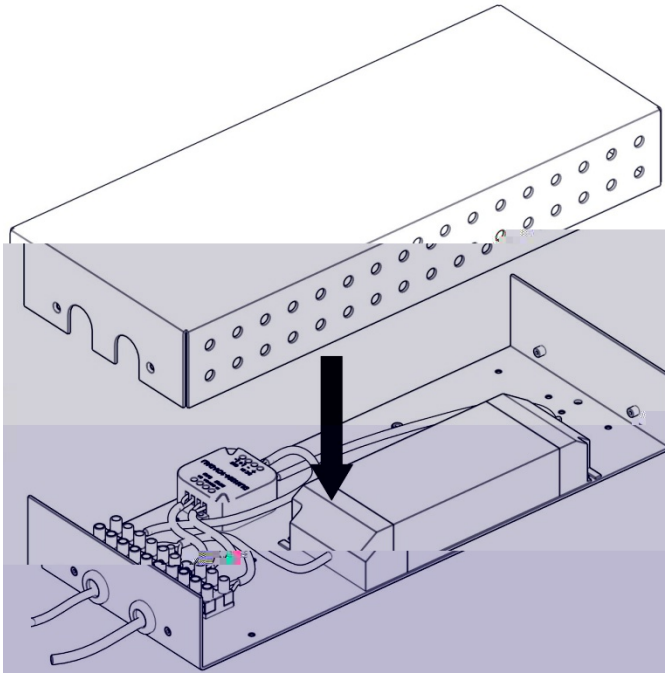

20

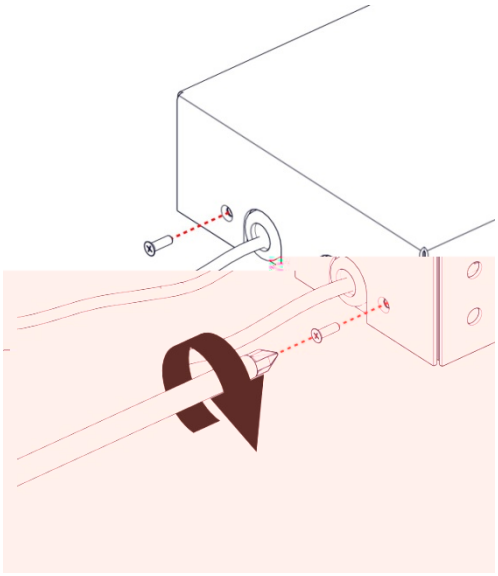

21

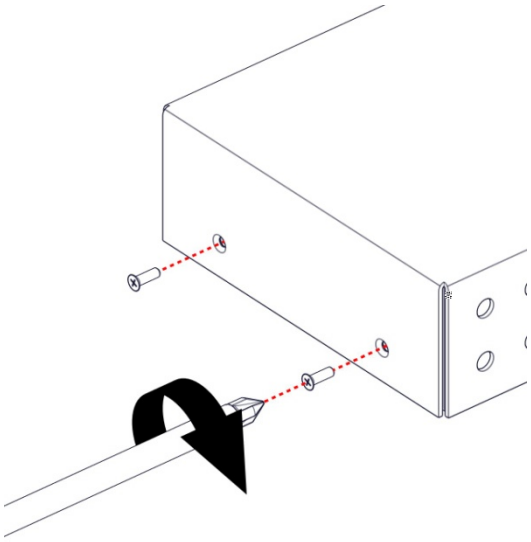

22

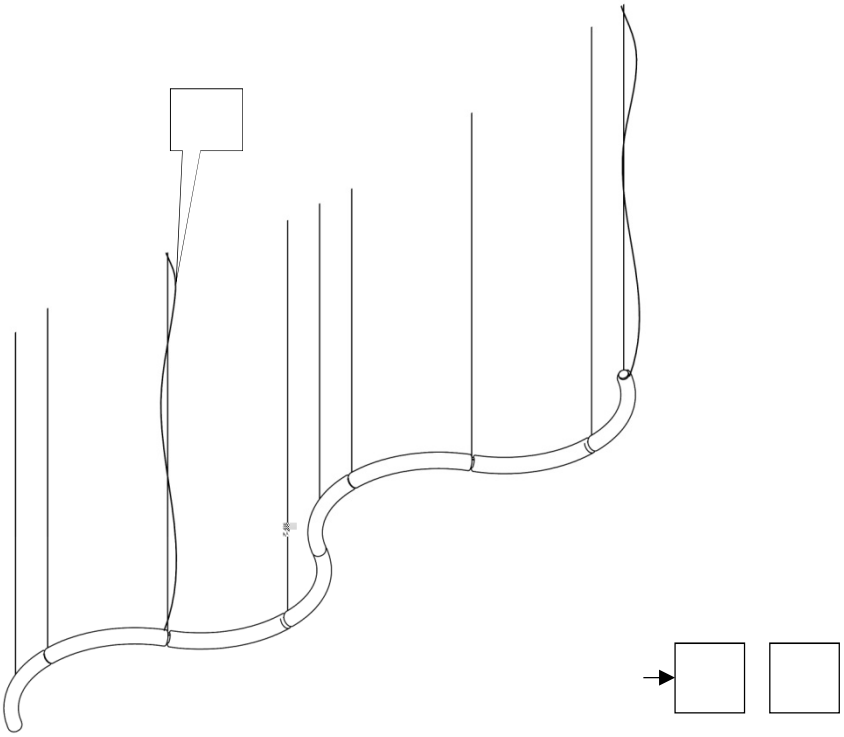

23

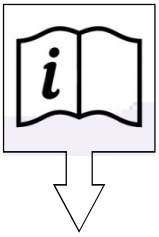

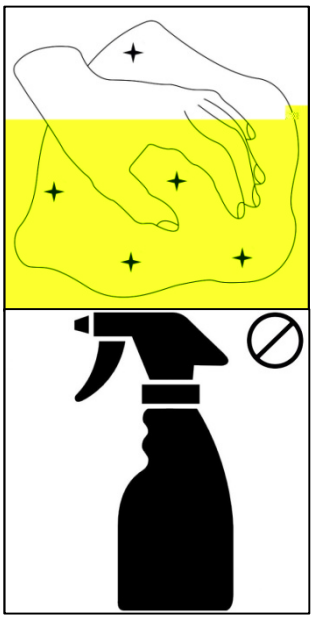

martinelli luce

Via Teresa Bandettini
55100 Lucca (Lu) – Italy

Tel.+39/0583.418315
Fax. +39/0583.419003

www.martinelliluce.it
info@martinelliluce.it

9407 REV.1 22/02/2022