21003 / 400 / DIM
LOOP
Emiliana Martinelli

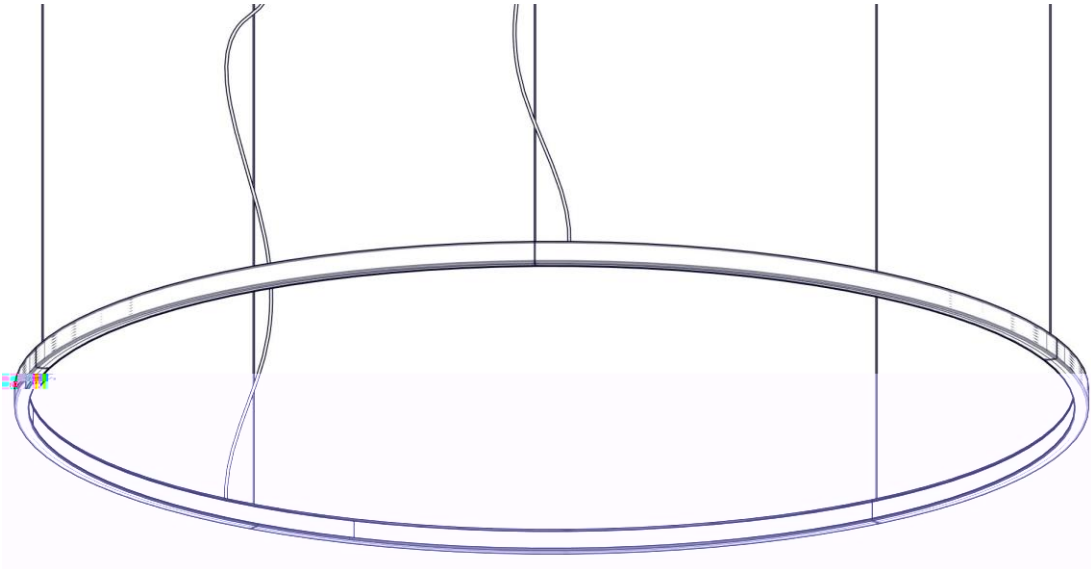

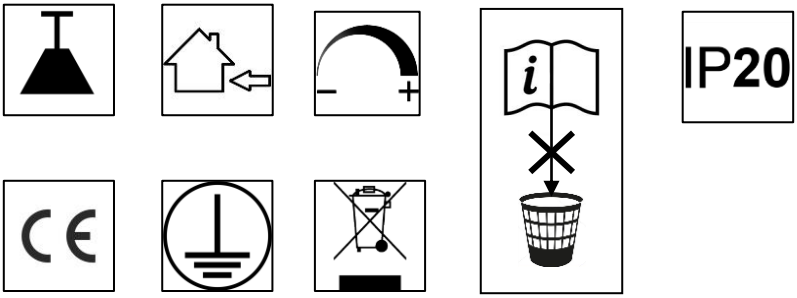

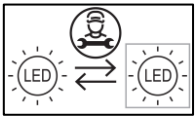

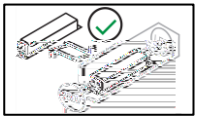

F
F
F
F
F
F

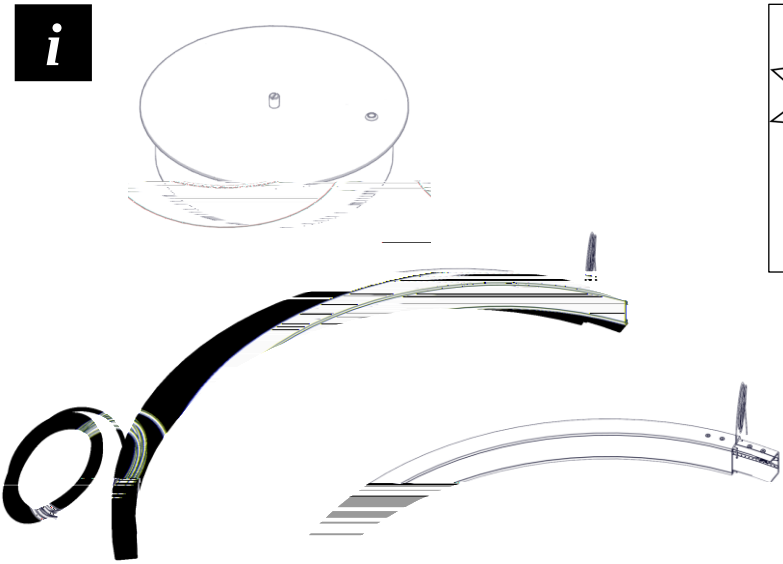

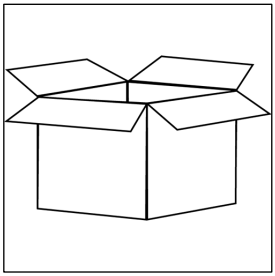

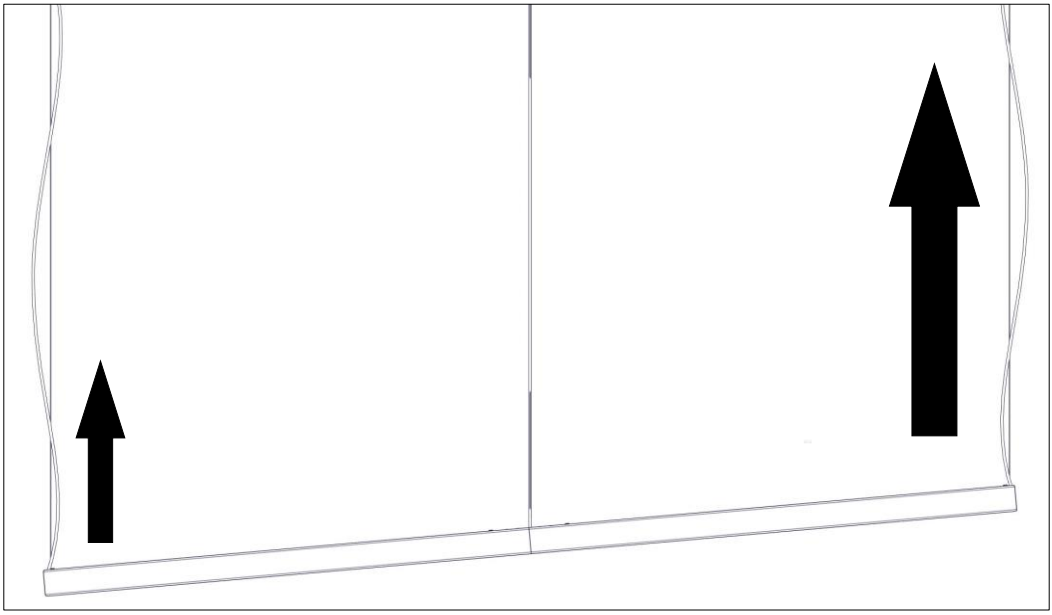

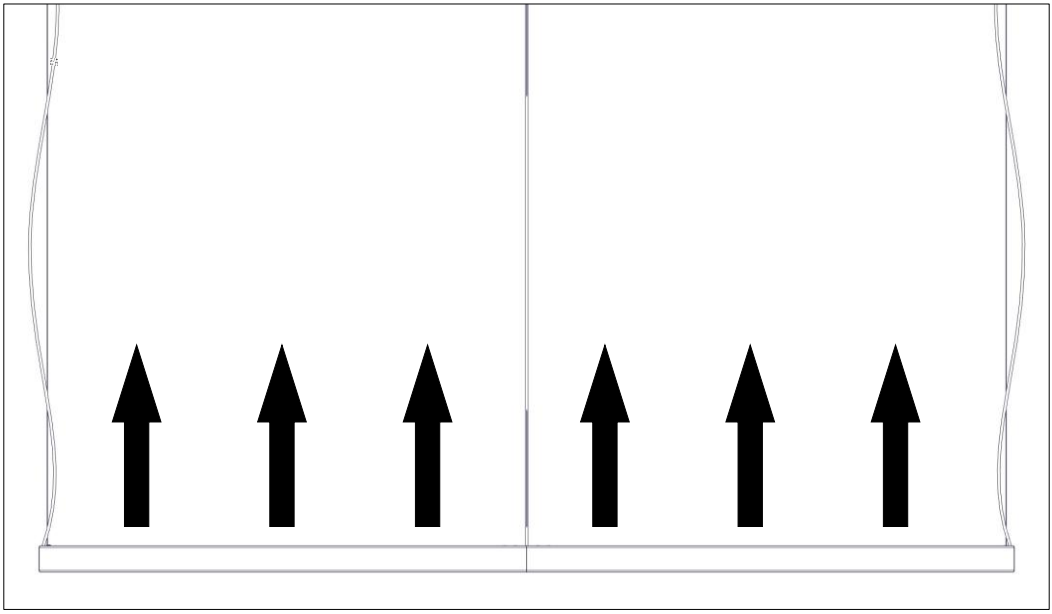

1

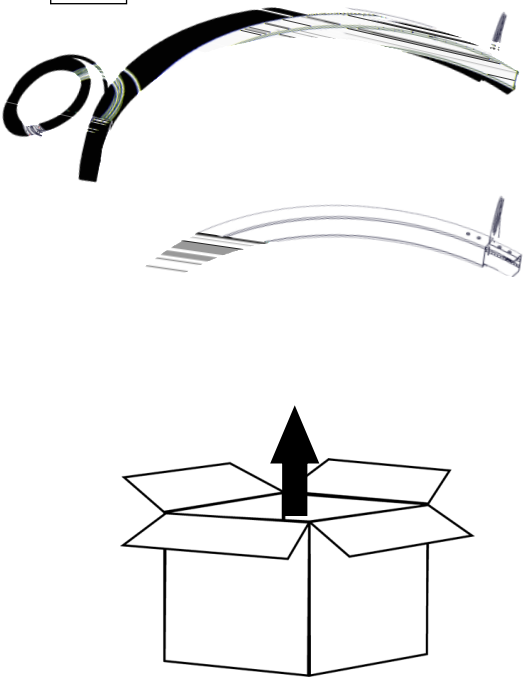

2

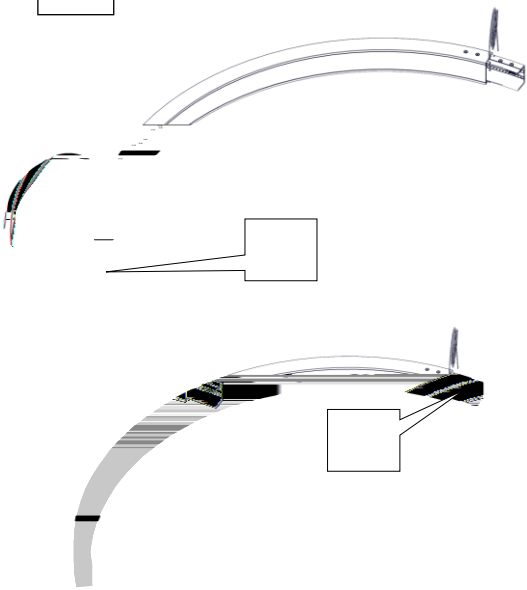

3

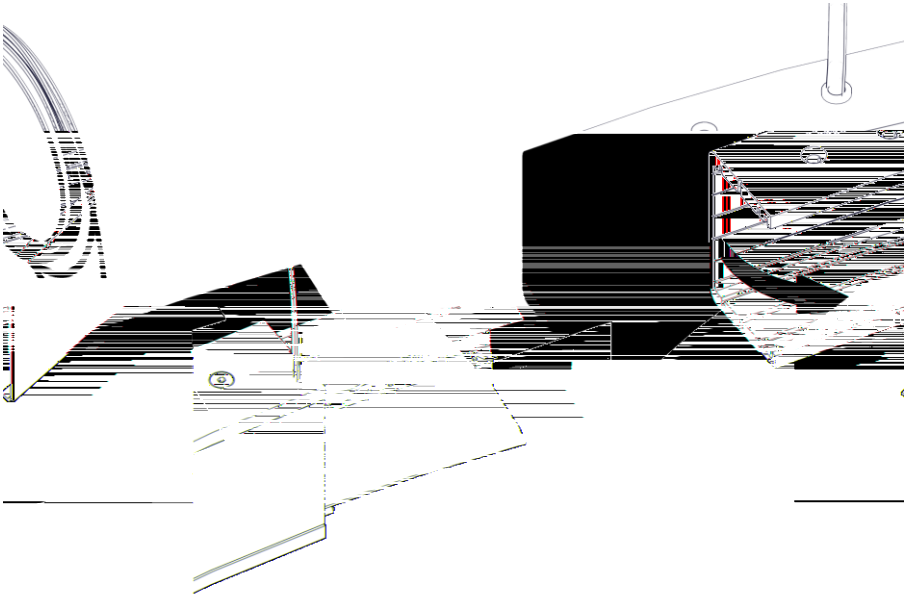

4

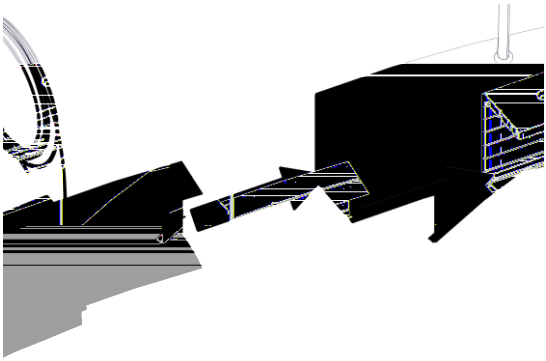

5

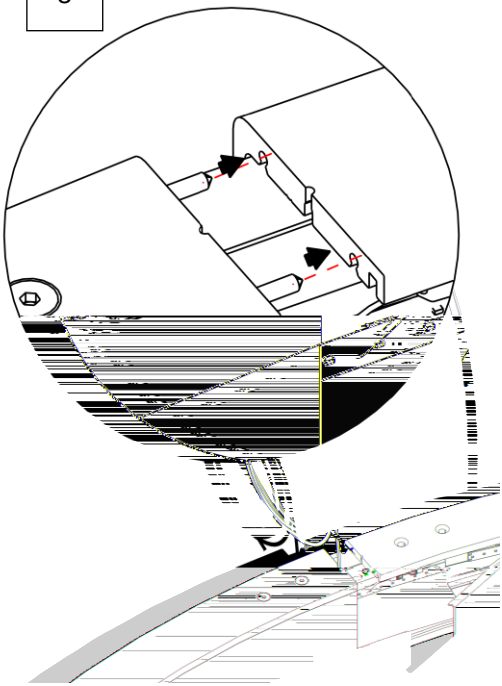

6

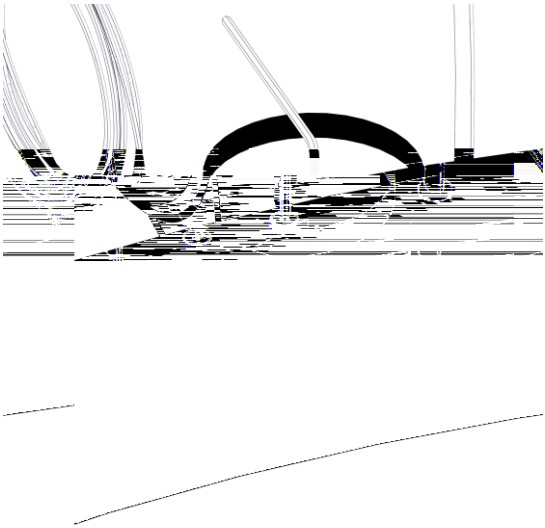

7

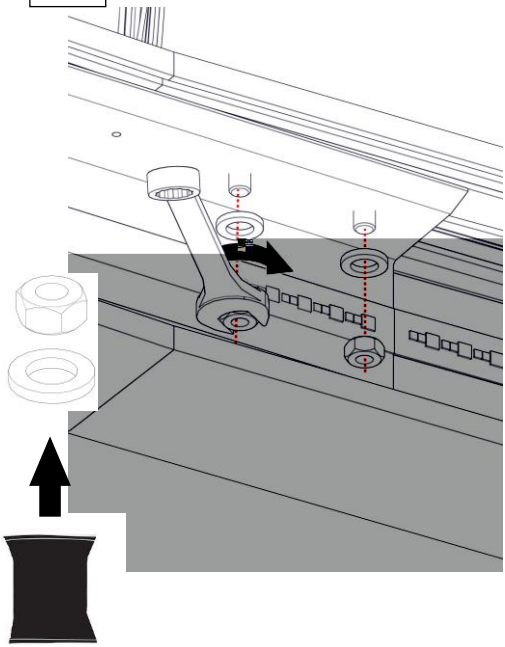

8

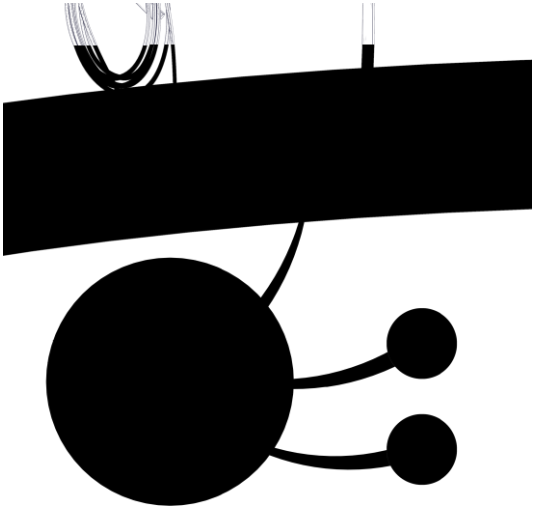

9

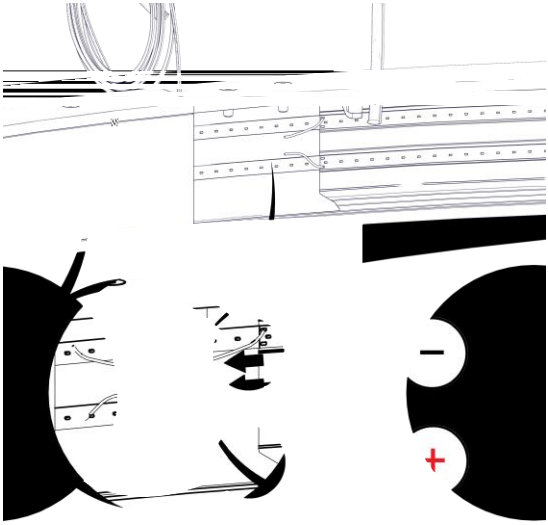

10

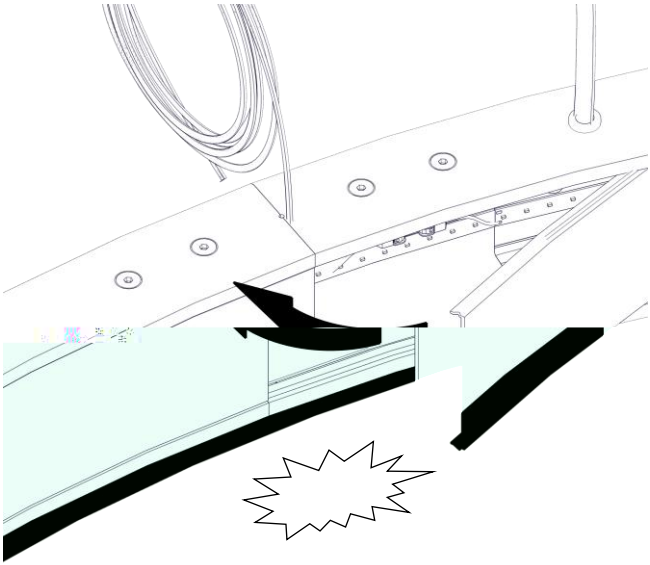

11

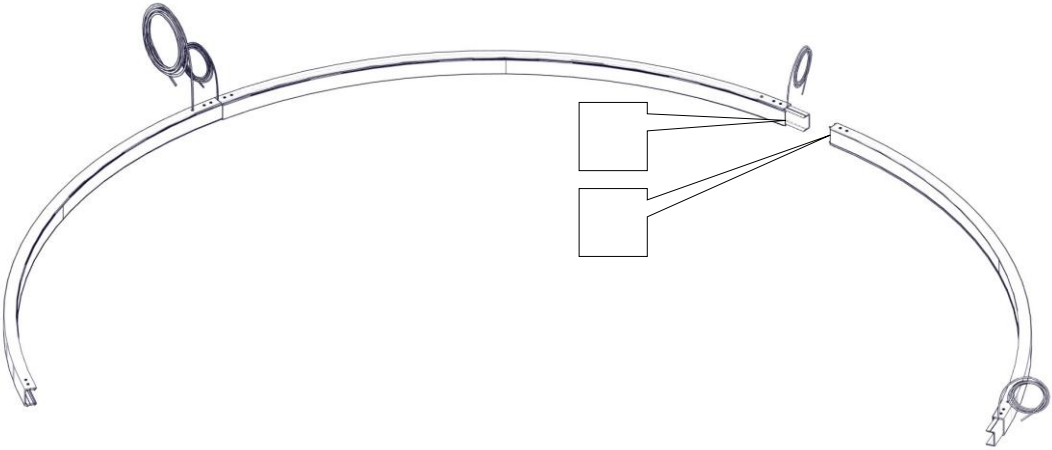

12

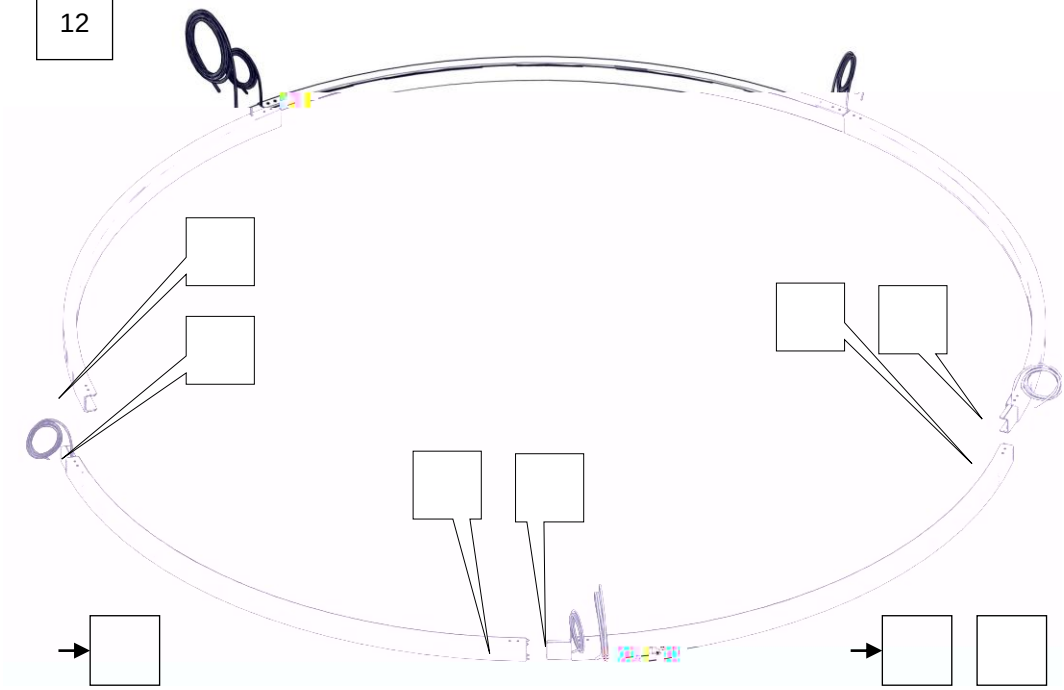

13

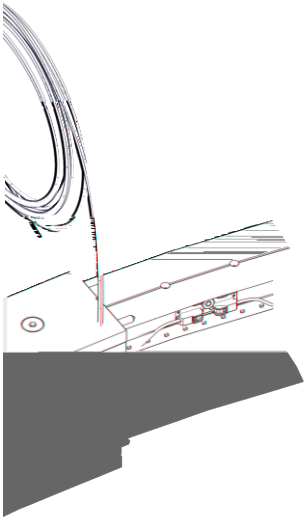

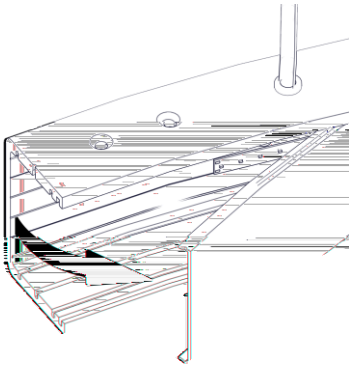

14

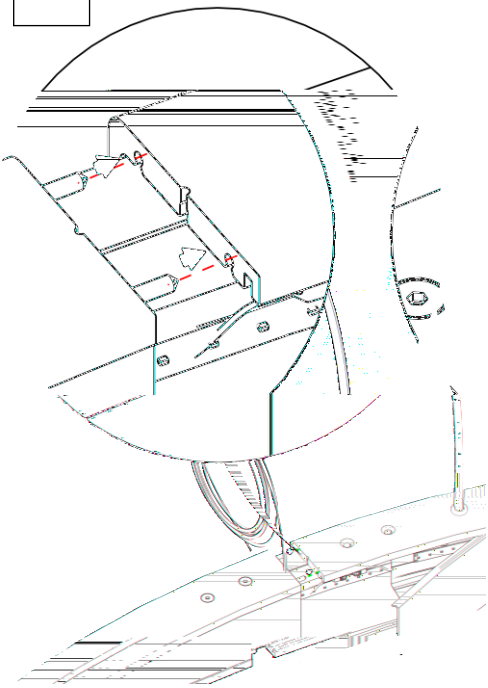

15

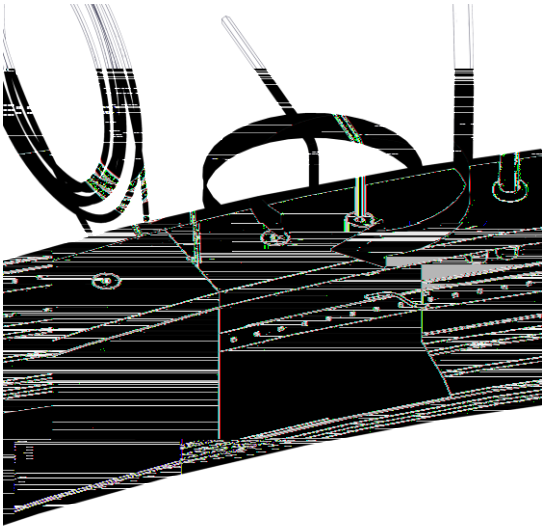

16

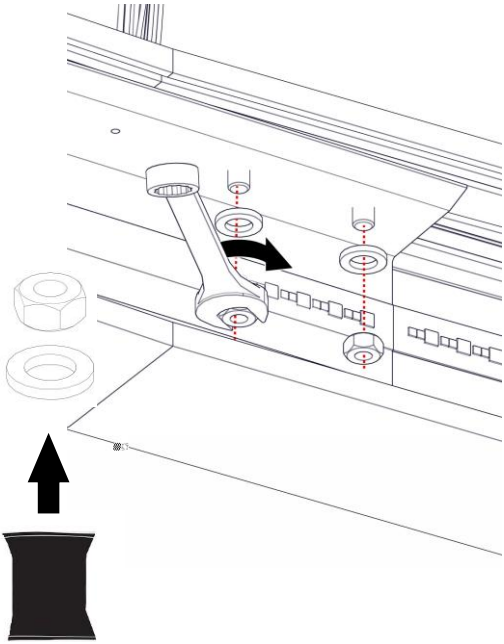

17

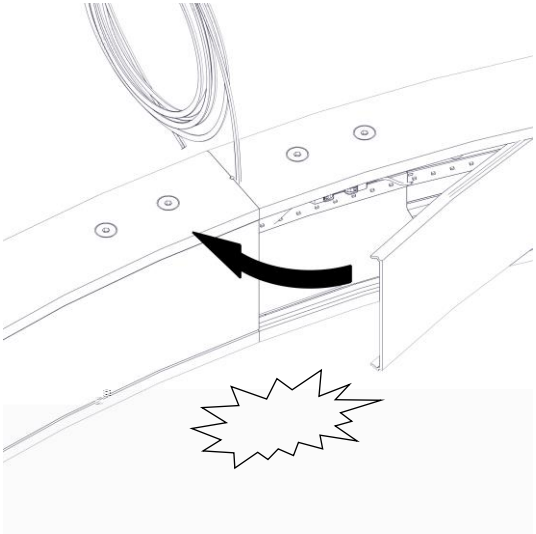

18

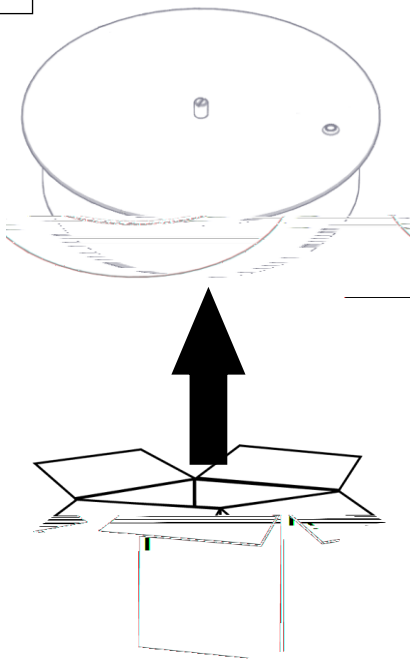

19

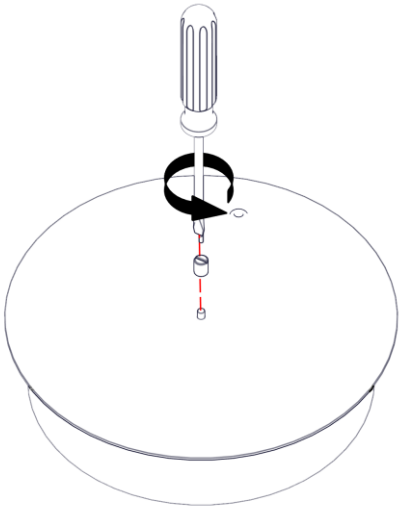

20

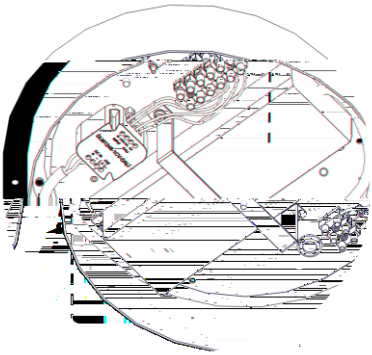

21

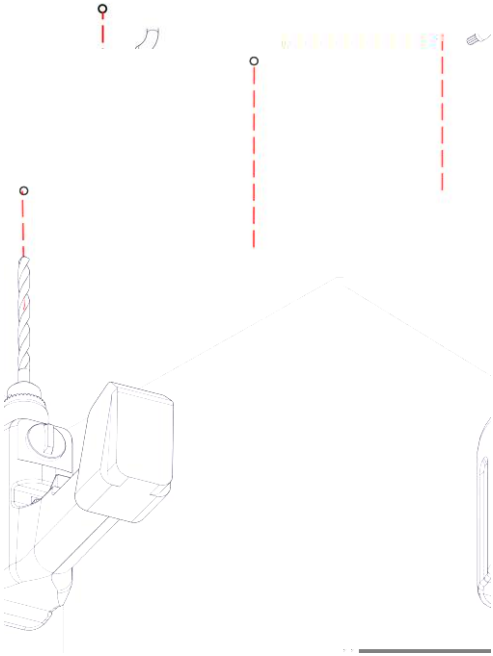

22

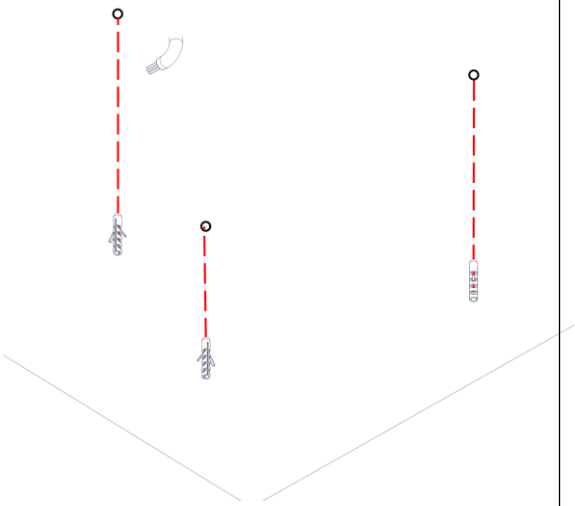

23

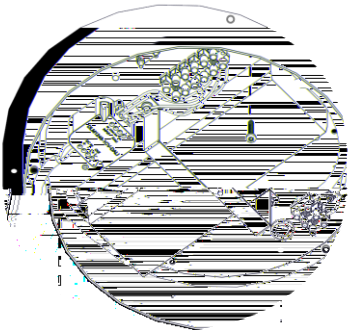

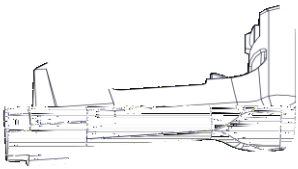

24 ! → 25

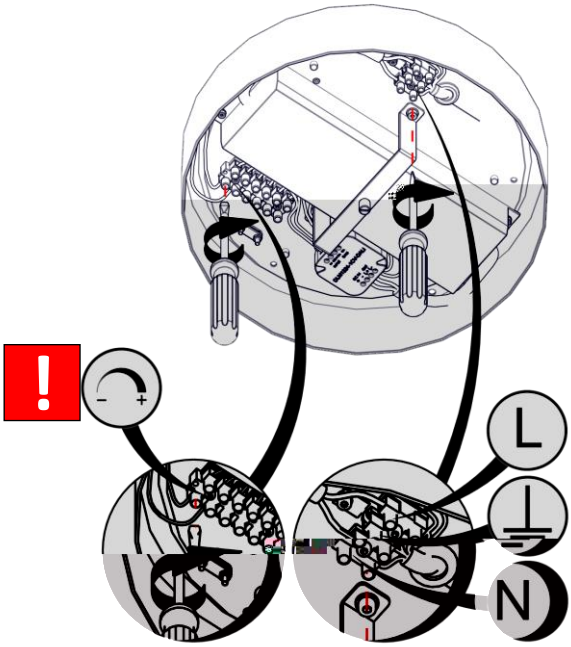

25

26

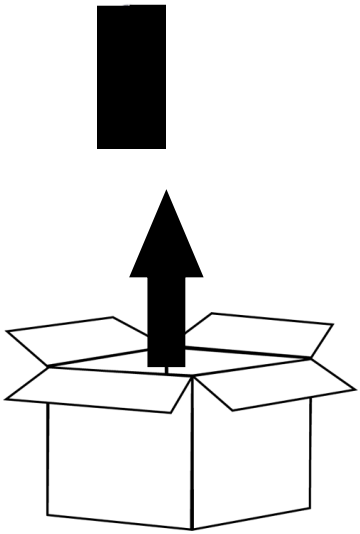

27

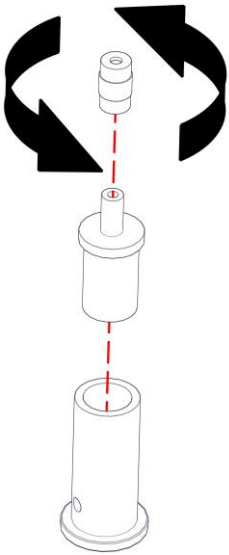

28

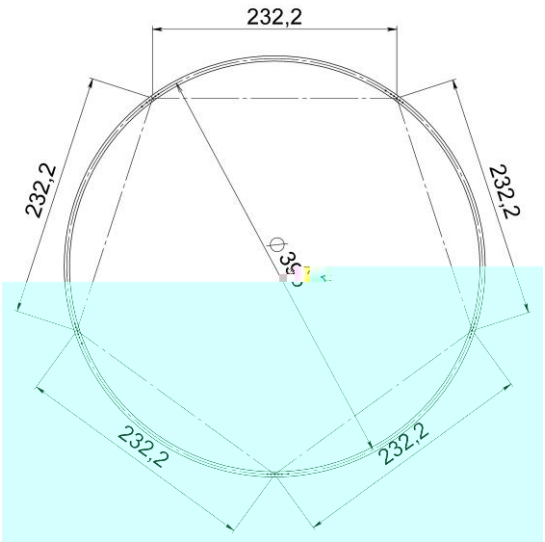

29

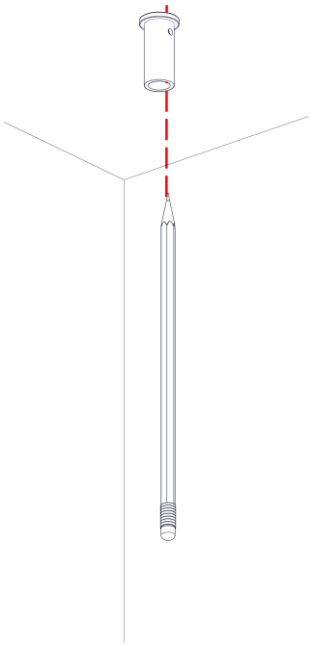

30

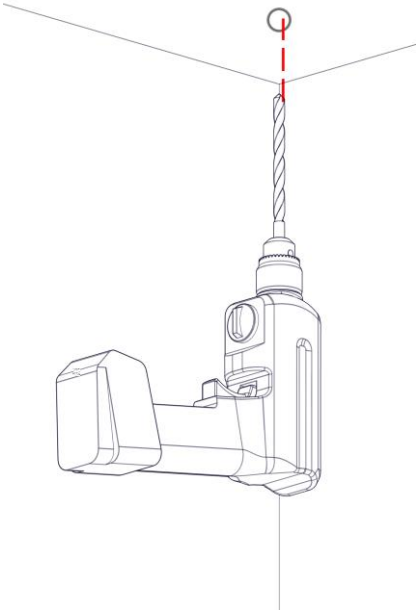

31

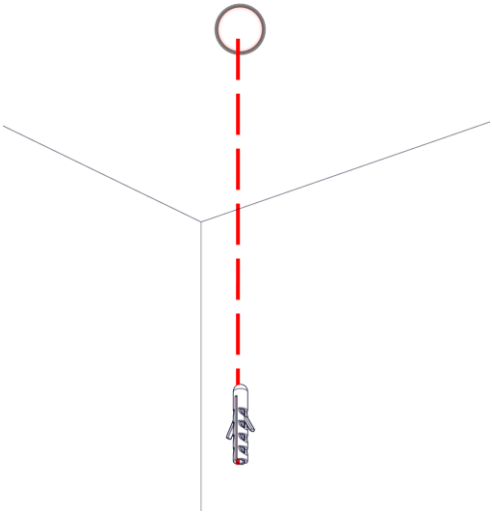

32

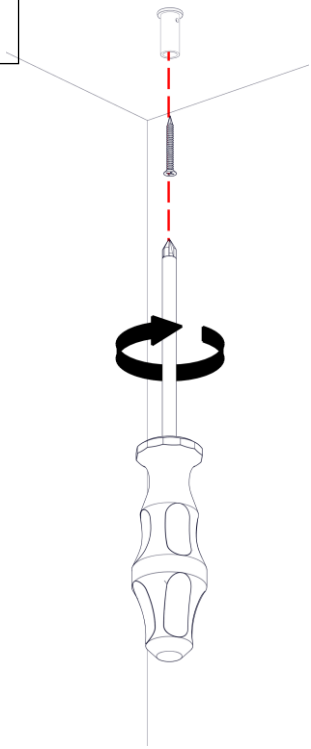

33

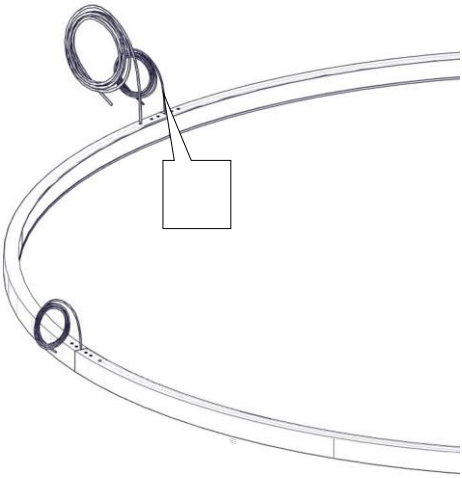

34

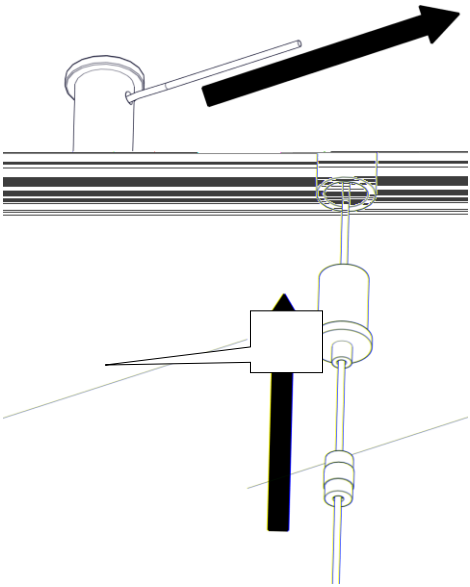

35

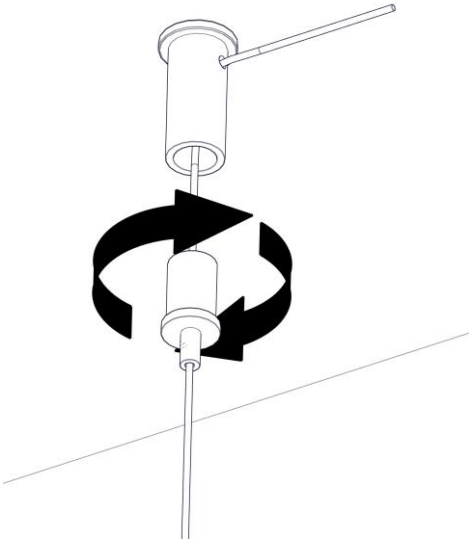

36

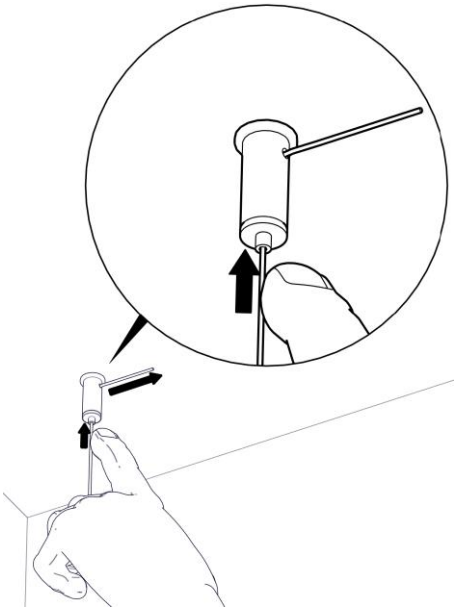

37

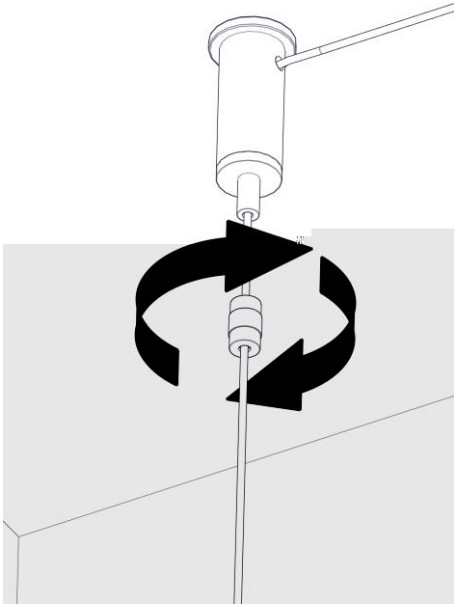

38

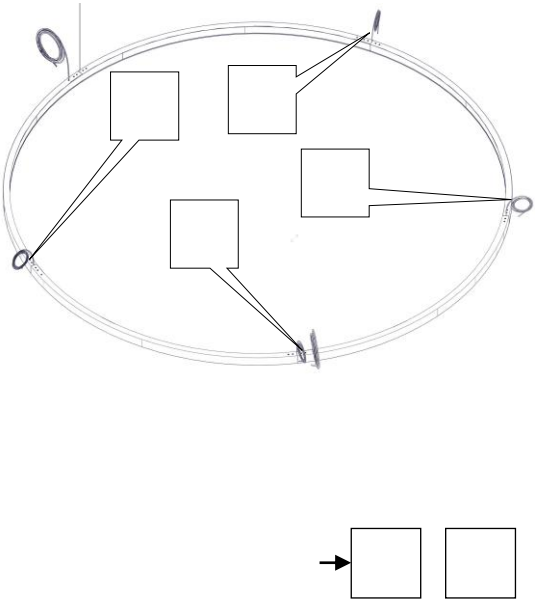

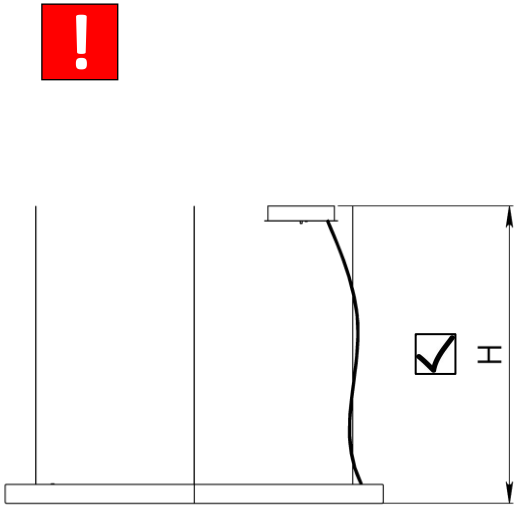

39

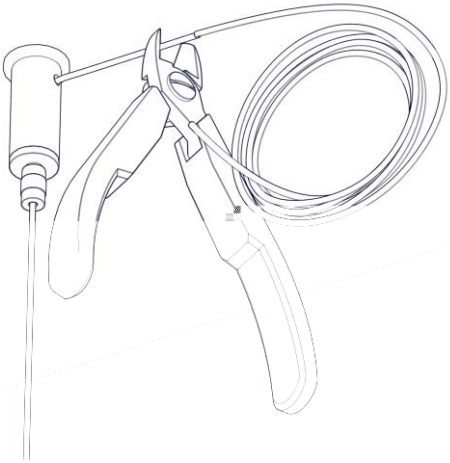

40

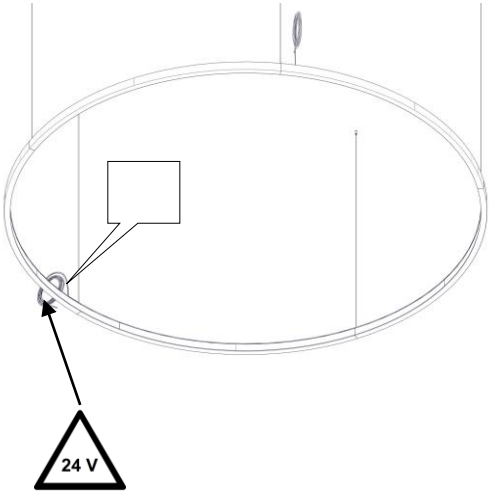

41

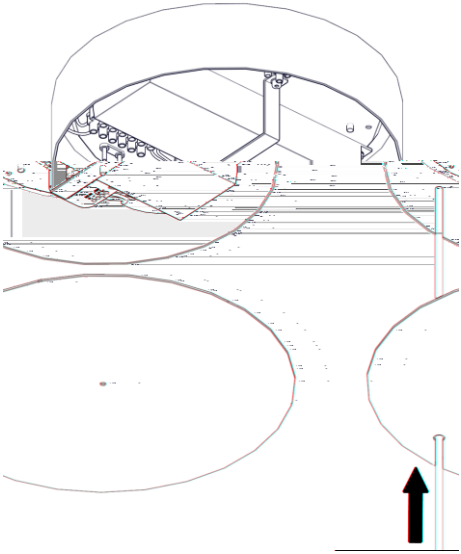

42

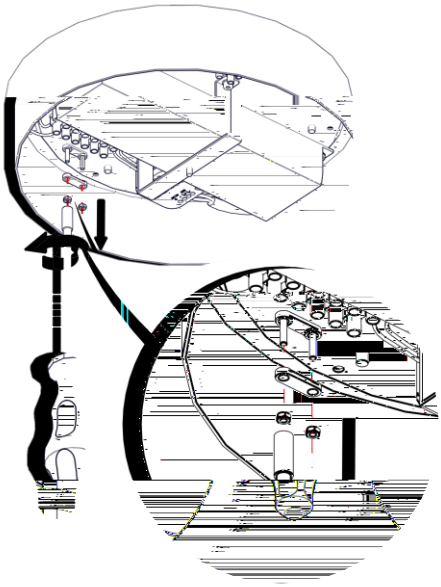

43

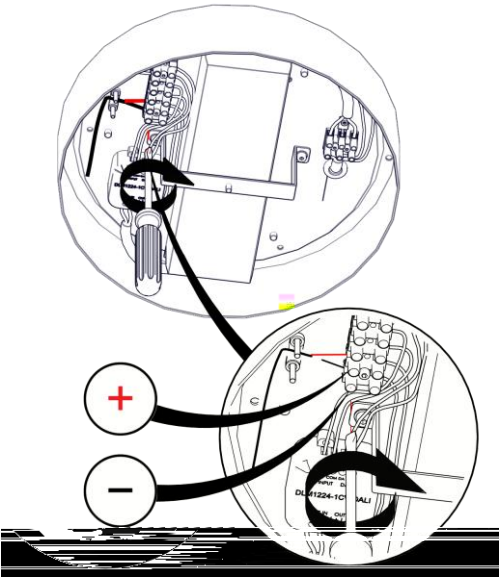

44

45

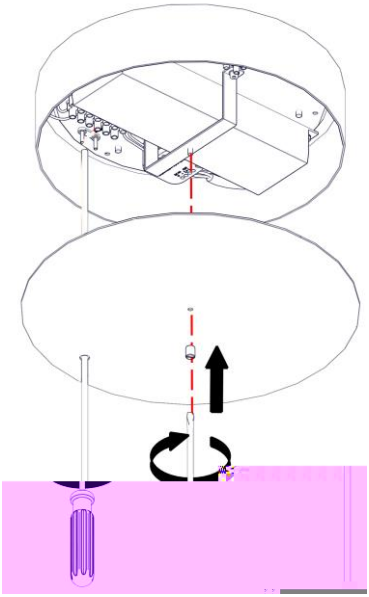

46

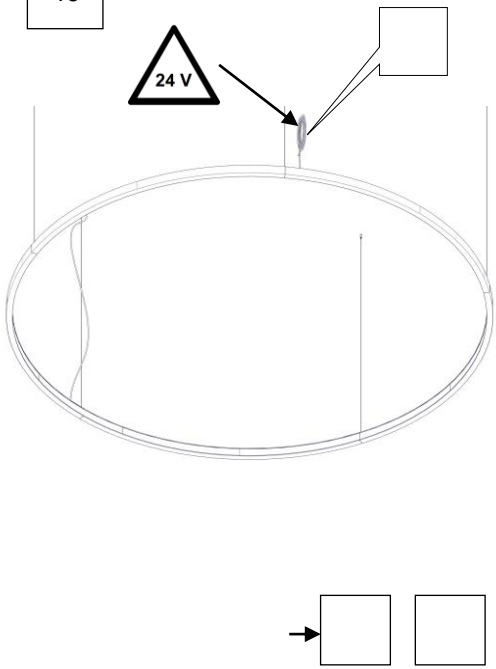

47

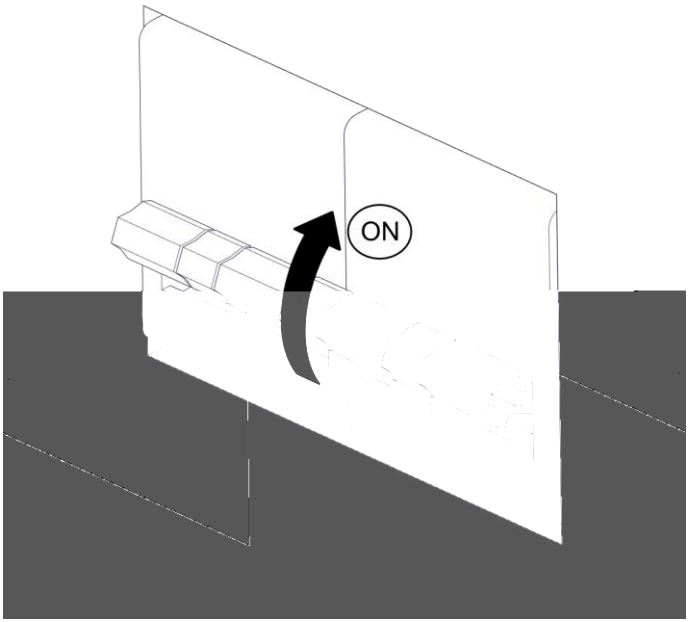

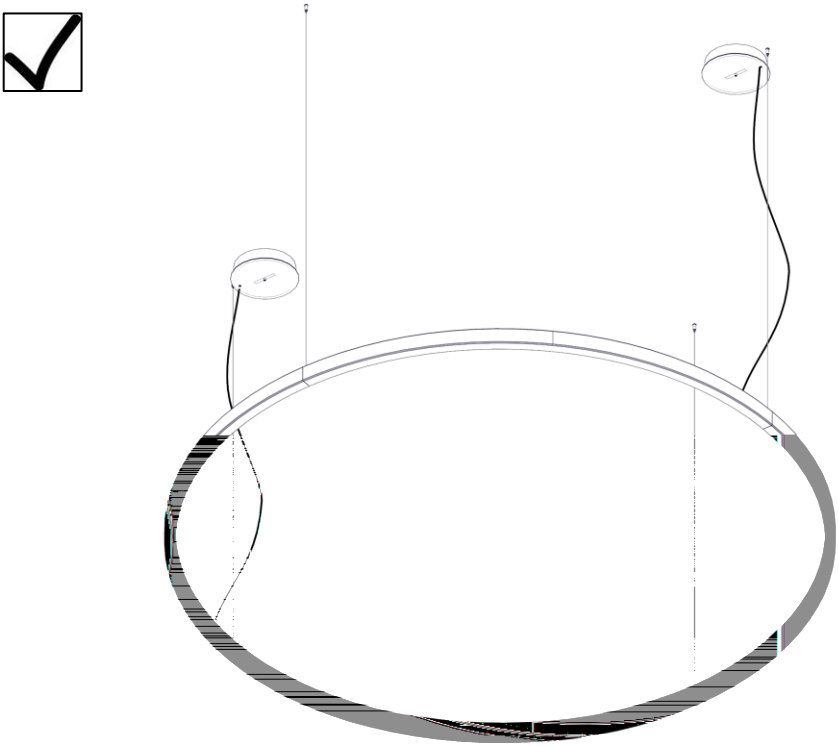

ON
OFF

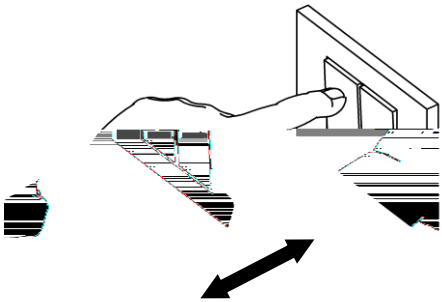

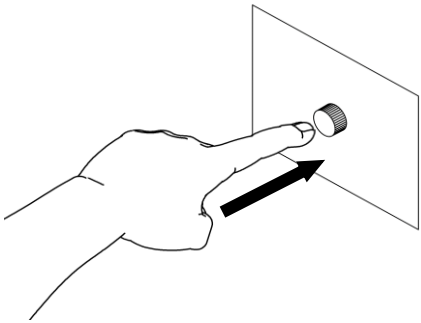

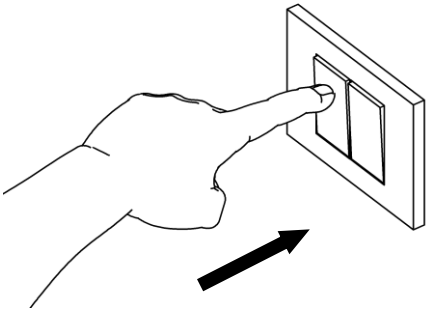

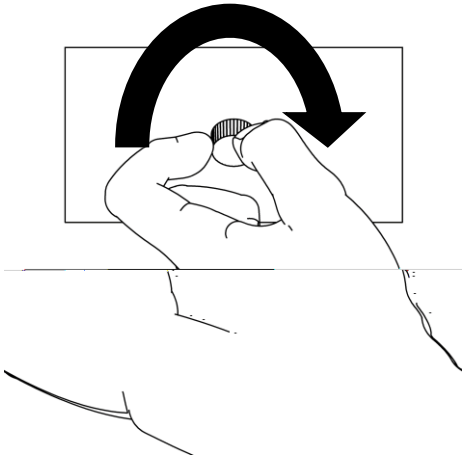

i

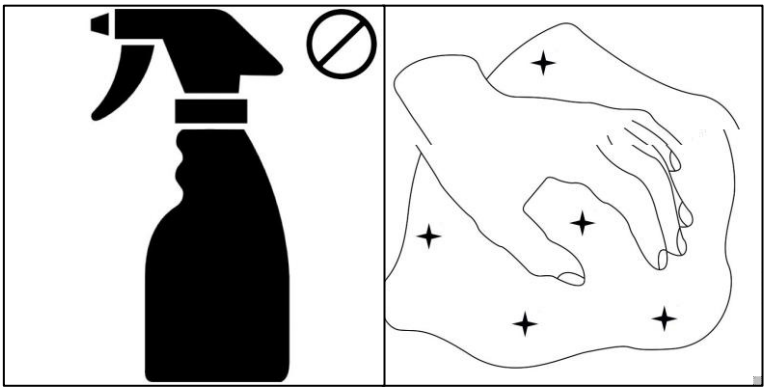

martinelli luce

Via Teresa Bandettini
55100 Lucca (Lu) Italy

Tel.+39/0583.418315
Fax. +39/0583.419003

www.martinelliluce.it
info@martinelliluce.it