2900 / J
DELUX
Design Studio Natural e Emiliana Martinelli

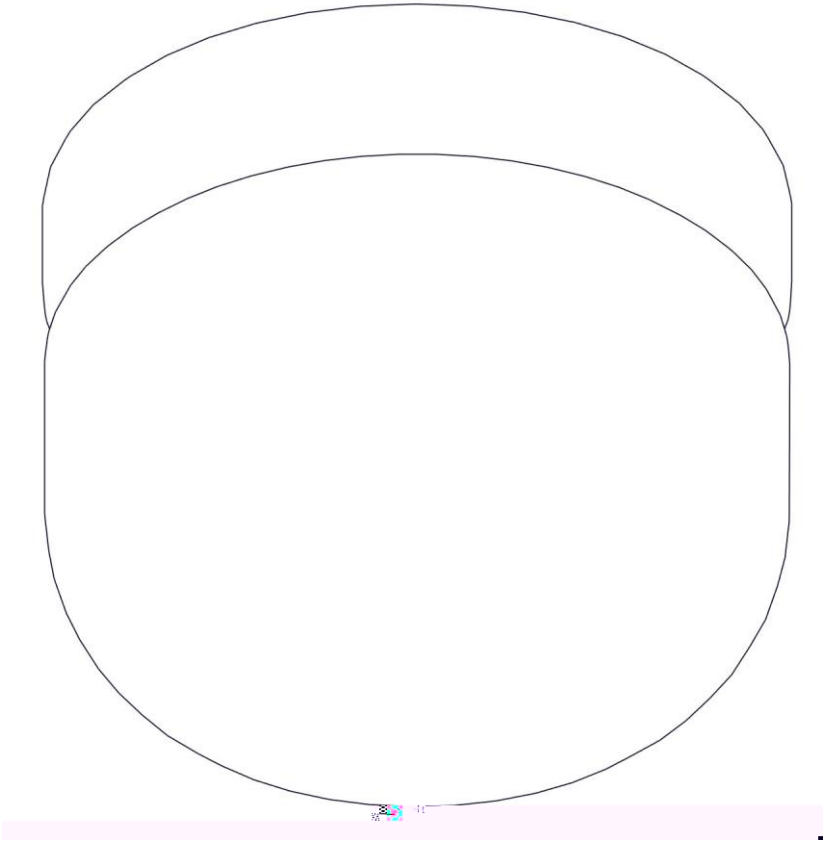

IP20
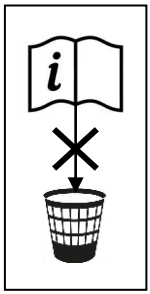

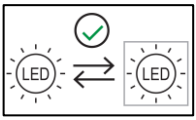
LED
LED

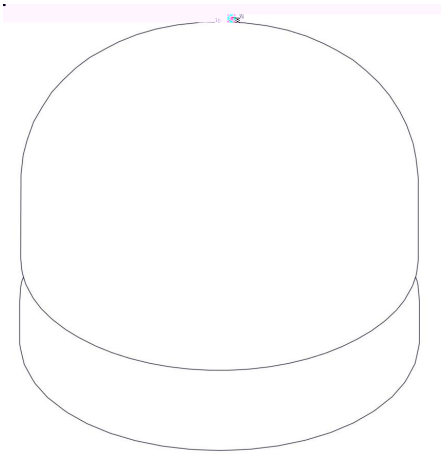

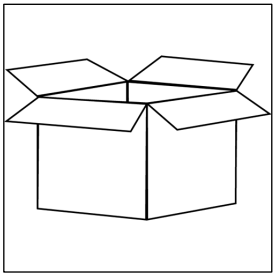

1

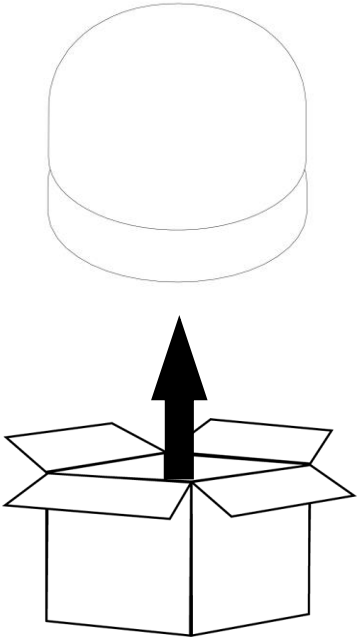

2

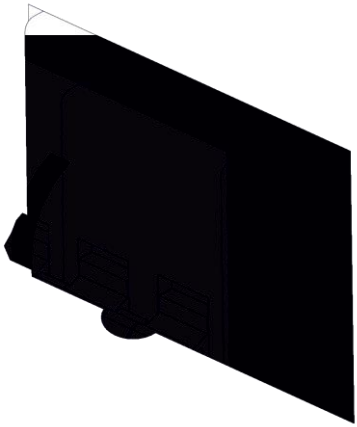

3

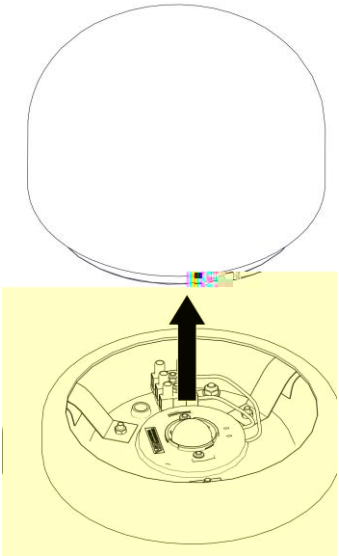

4

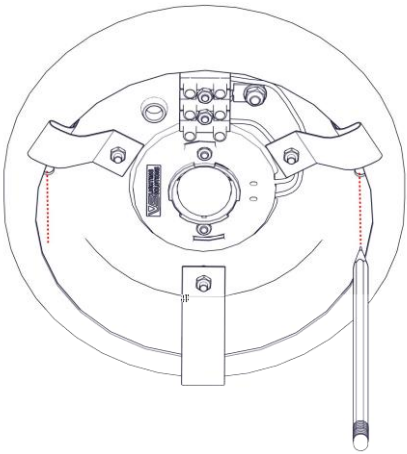

5

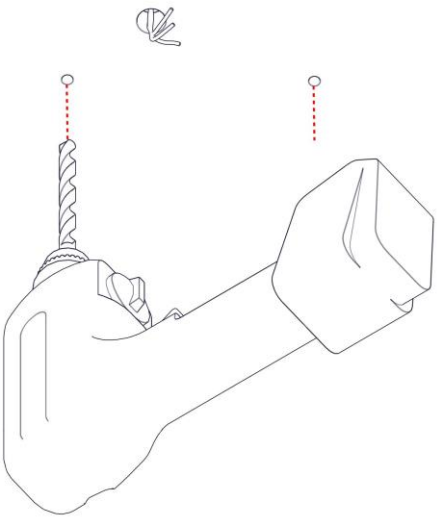

6

7

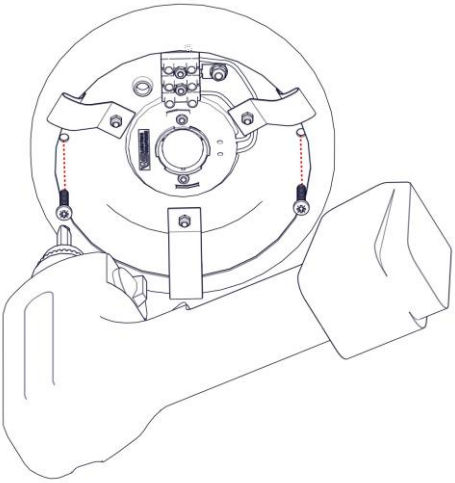

8

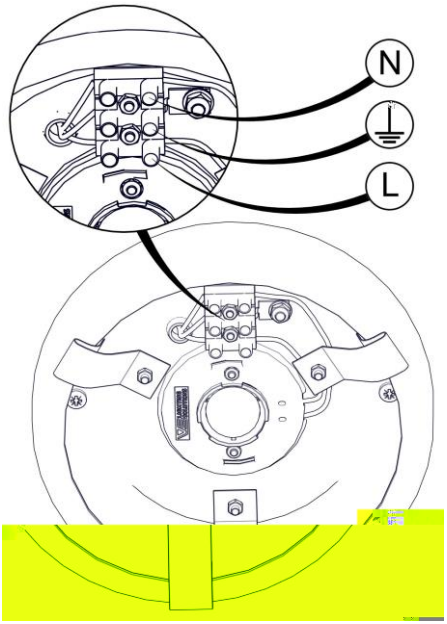

9

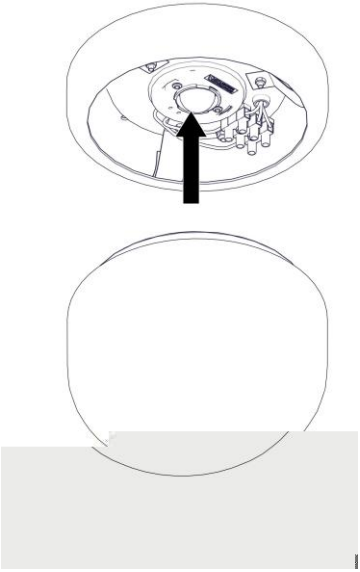

10

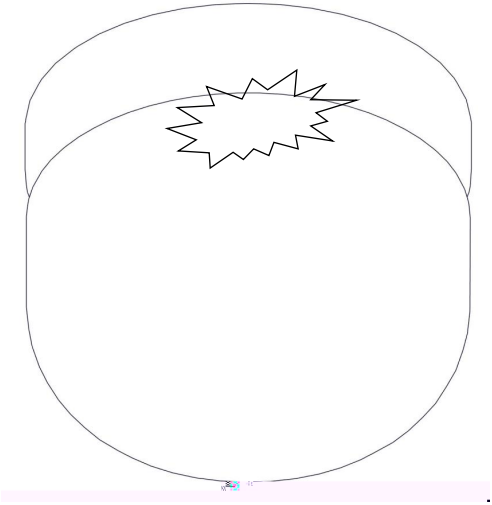

11

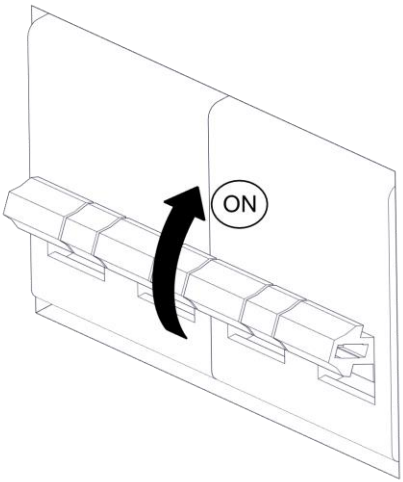

i

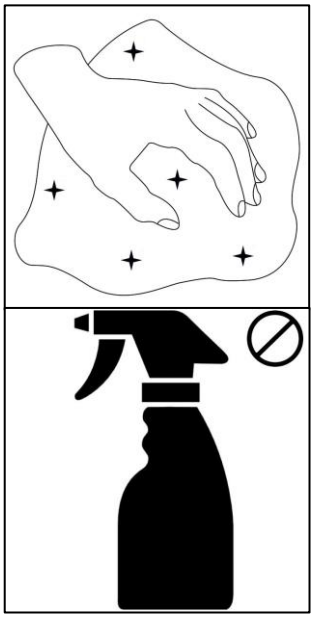

martinelli luce

Via Teresa Bandettini
55100 Lucca (Lu) Italy

Tel.+39/0583.418315
Fax. +39/0583.419003

www.martinelliluce.it
info@martinelliluce.it