21010 / DIM
LOOP RETTANGOLARE

Design Emiliana Martinelli

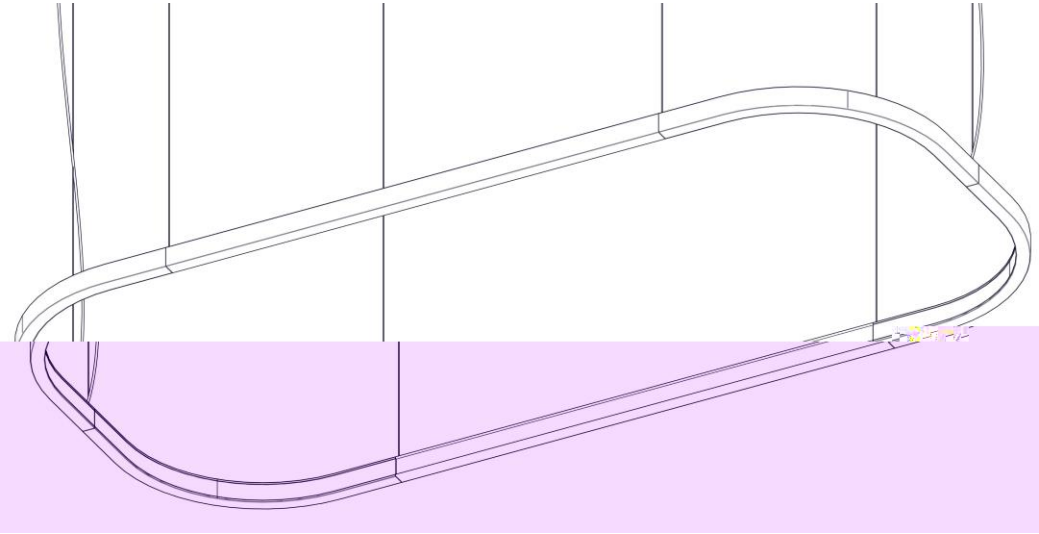

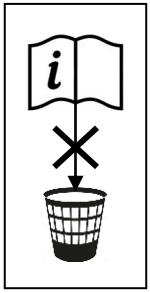

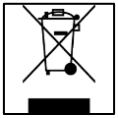
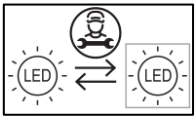

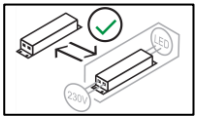

F
F
F
F
F
F

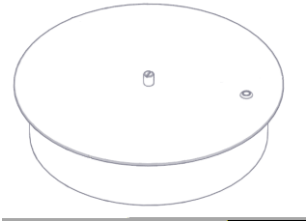

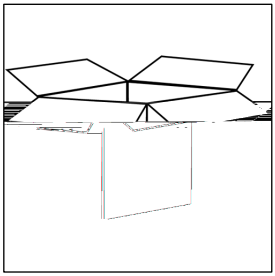

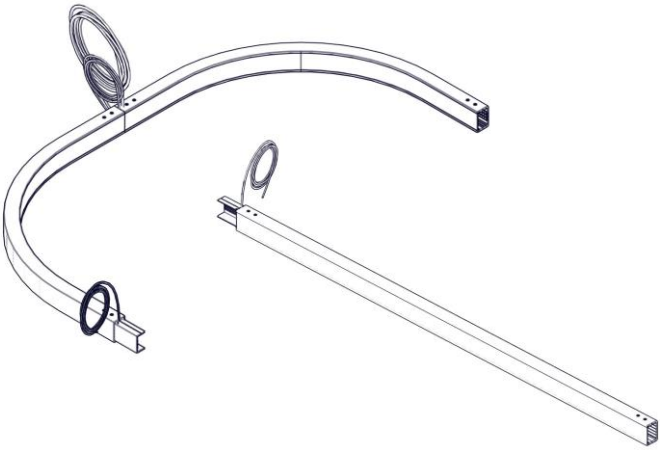

1

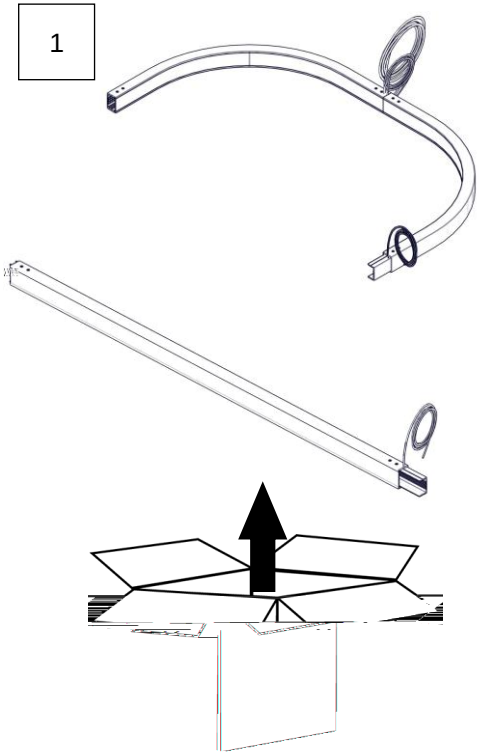

2

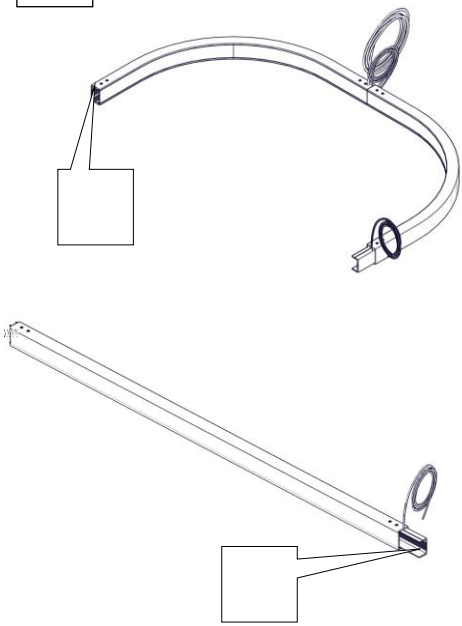

3

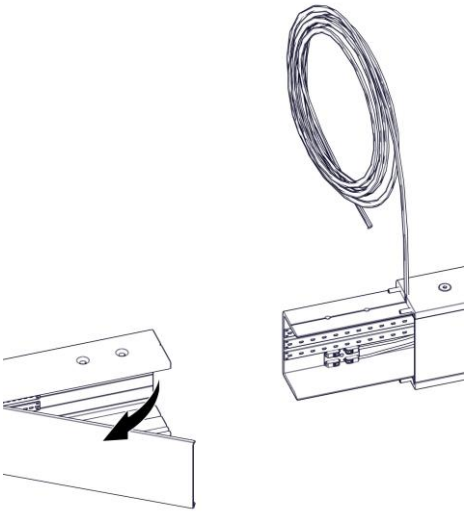

4

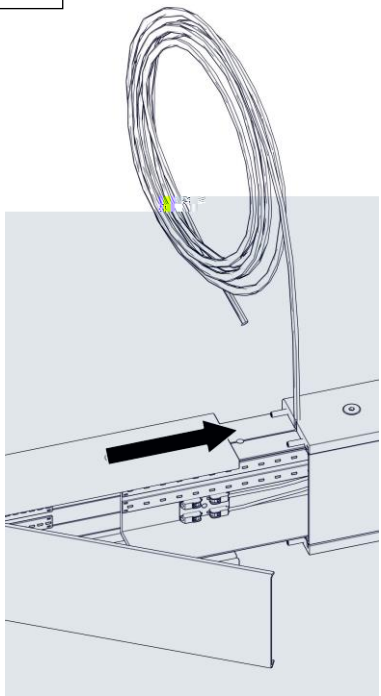

5

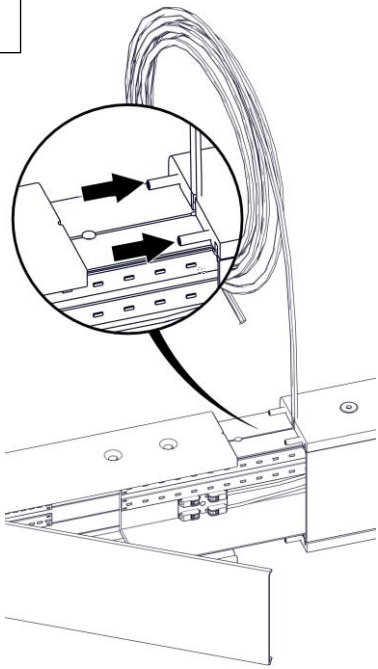

6

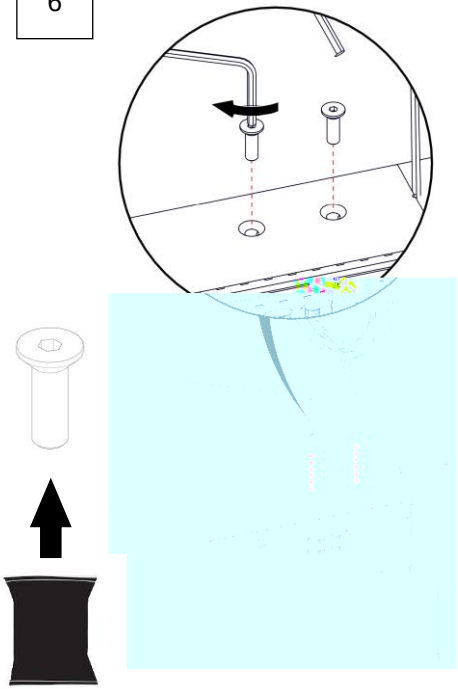

7

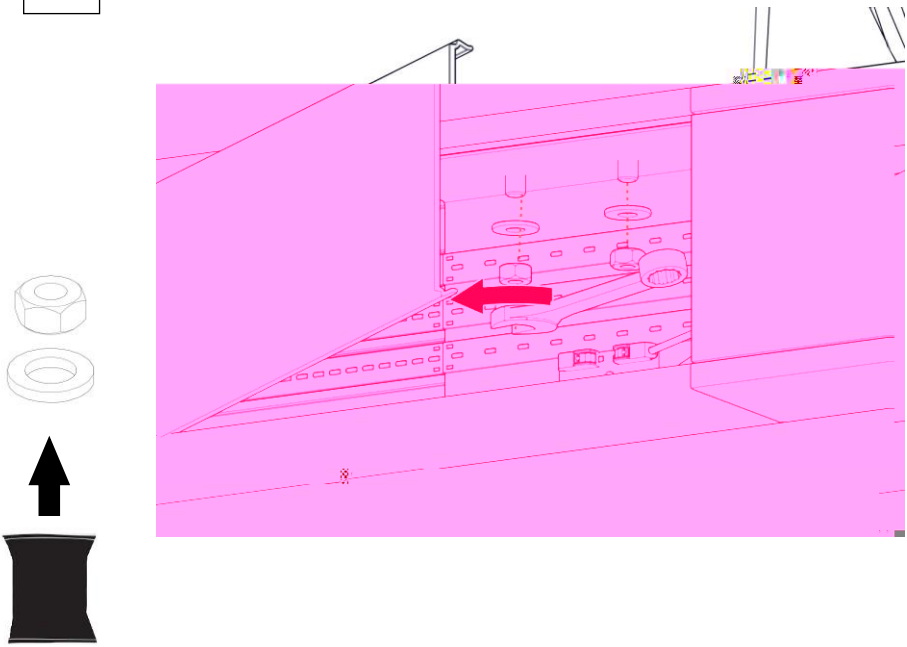

8

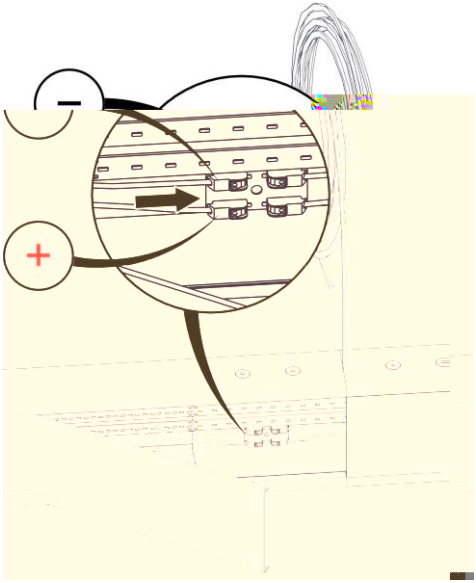

9

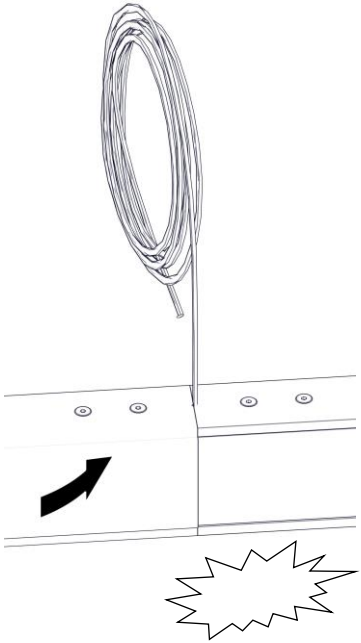

10

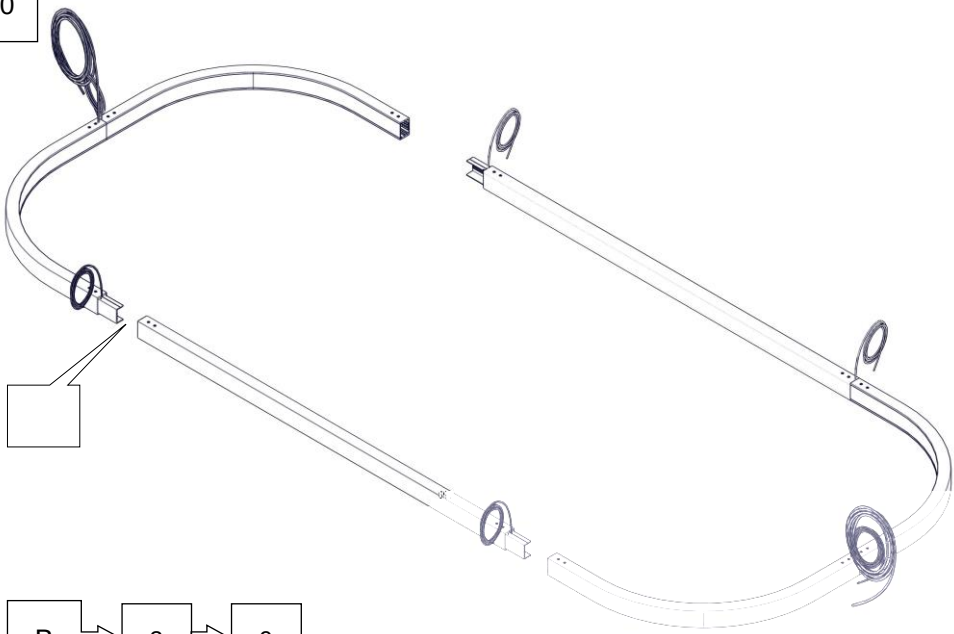

B → 3 → 9

11

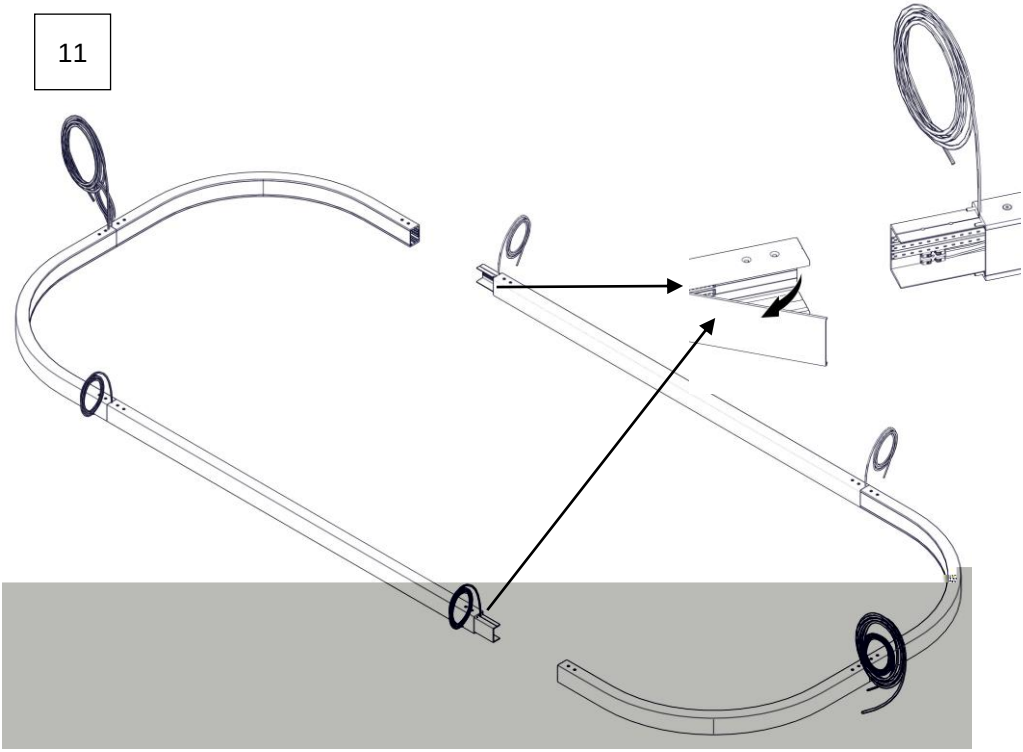

12

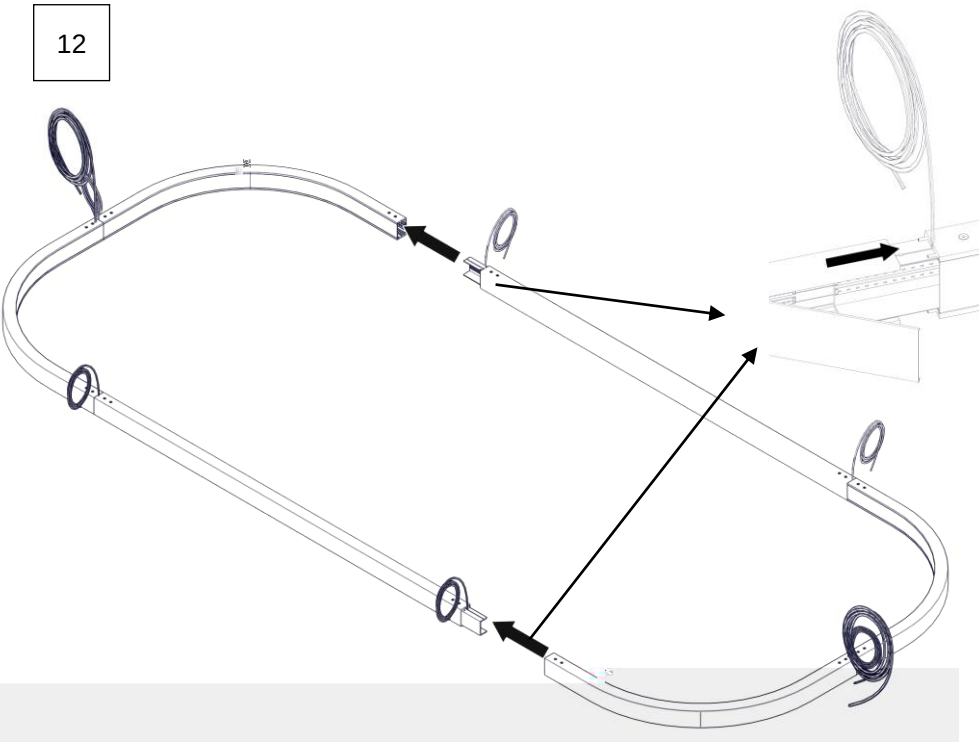

13

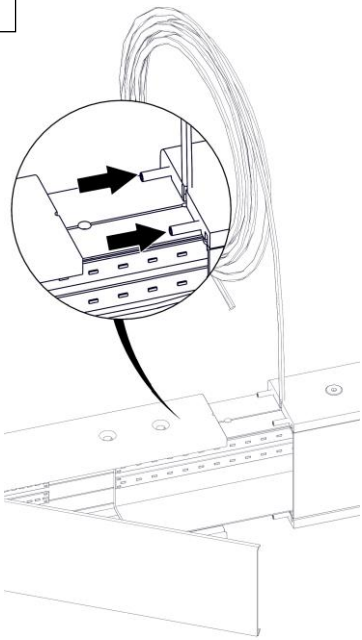

14

15

16

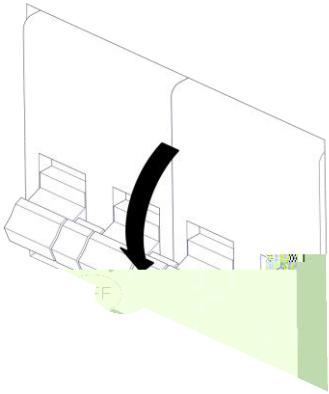

17

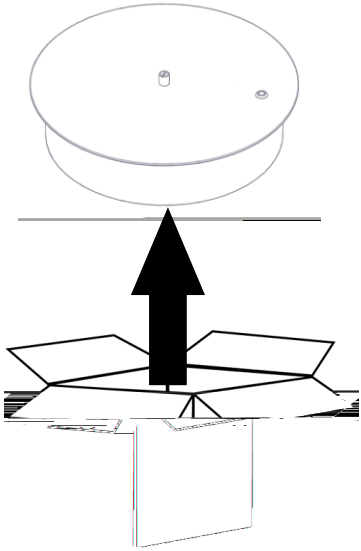

!

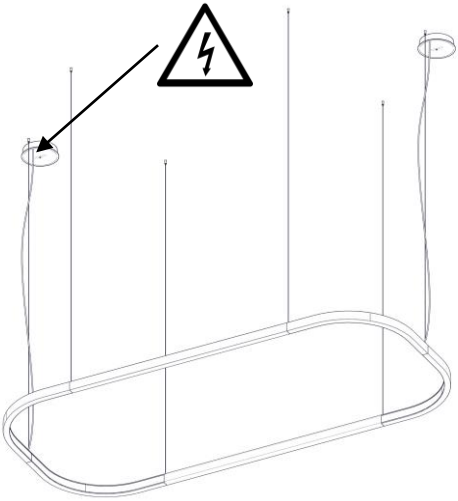

18

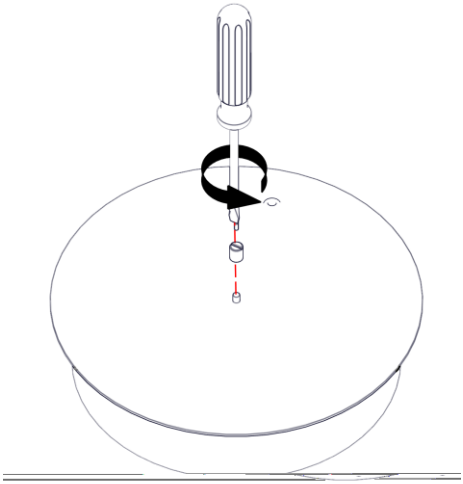

19

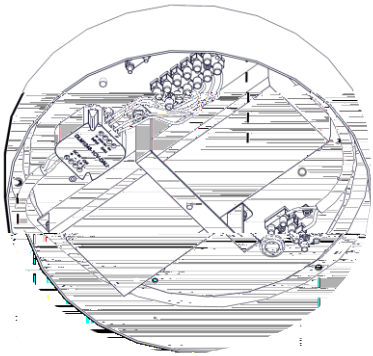

20

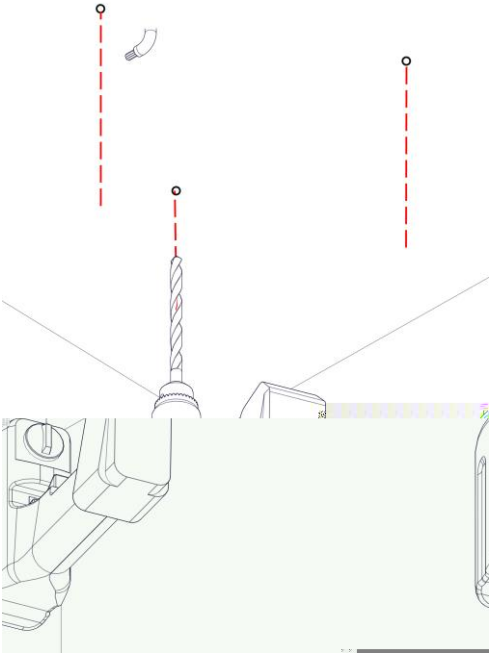

21

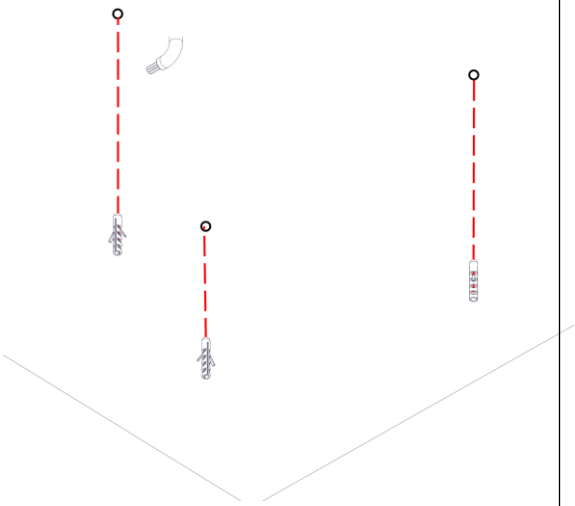

22

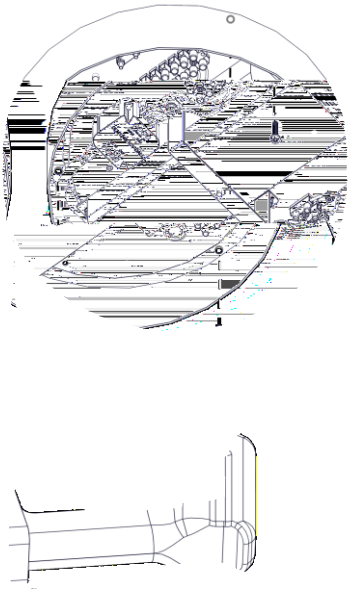

23 ! → 24

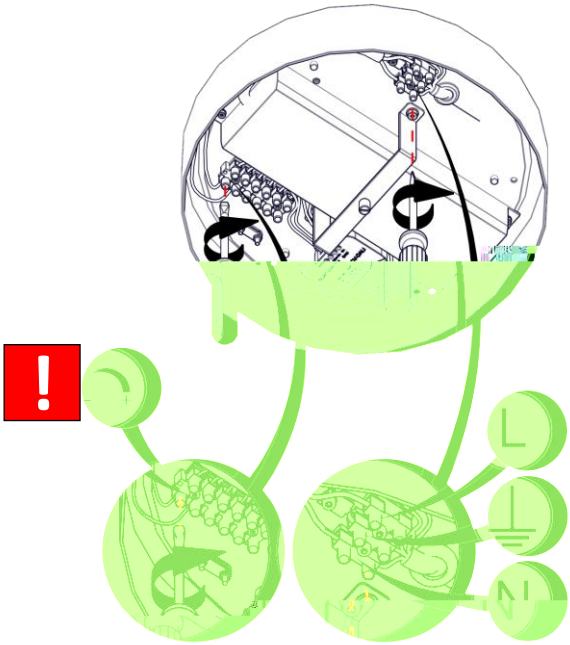
L
N

24

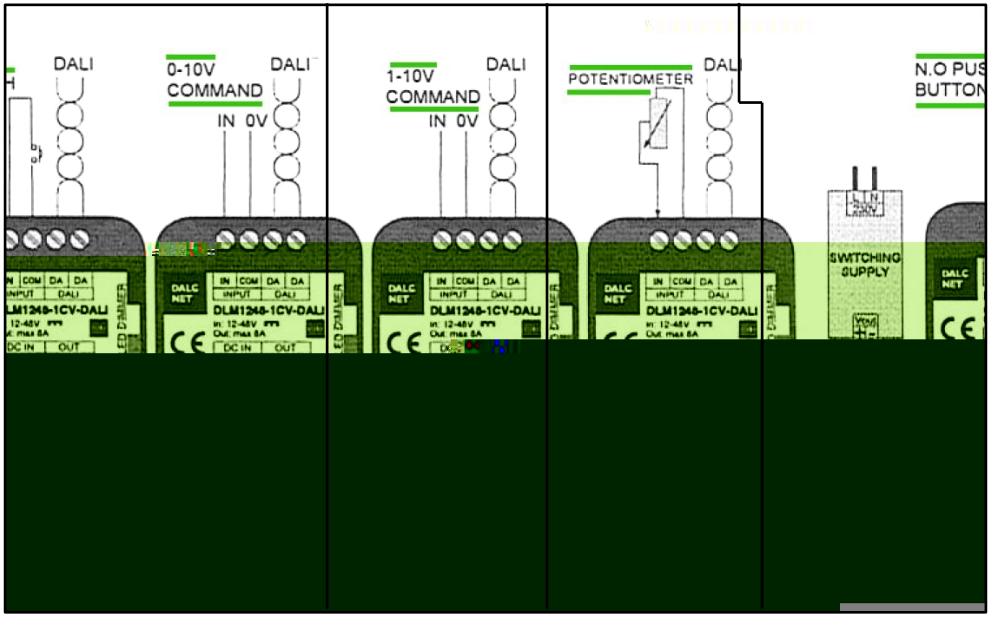
DALI
0-10V
COMMAND
IN 0V
DALI
1-10V
COMMAND
IN 0V
DALI
POTENTIOMETER
DALI
N.O PUS
BUTTON
SWITCHING
SUPPLY
DLM1248-1CV-DALI
DALC
NET

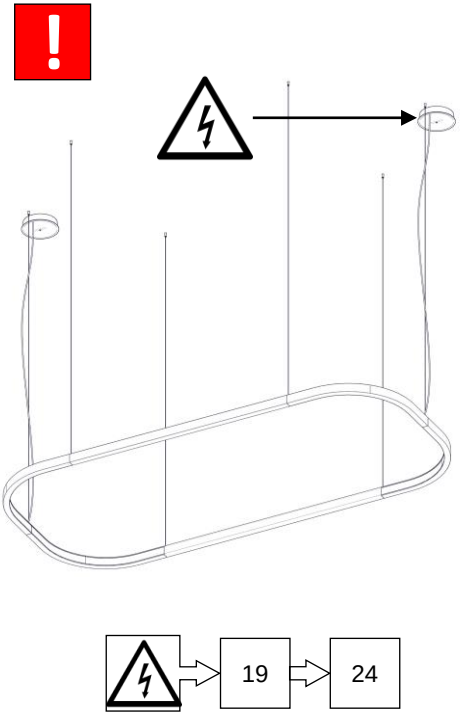
19
24

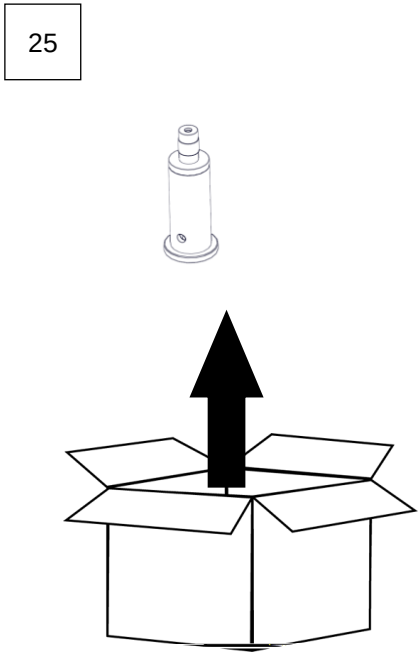
25

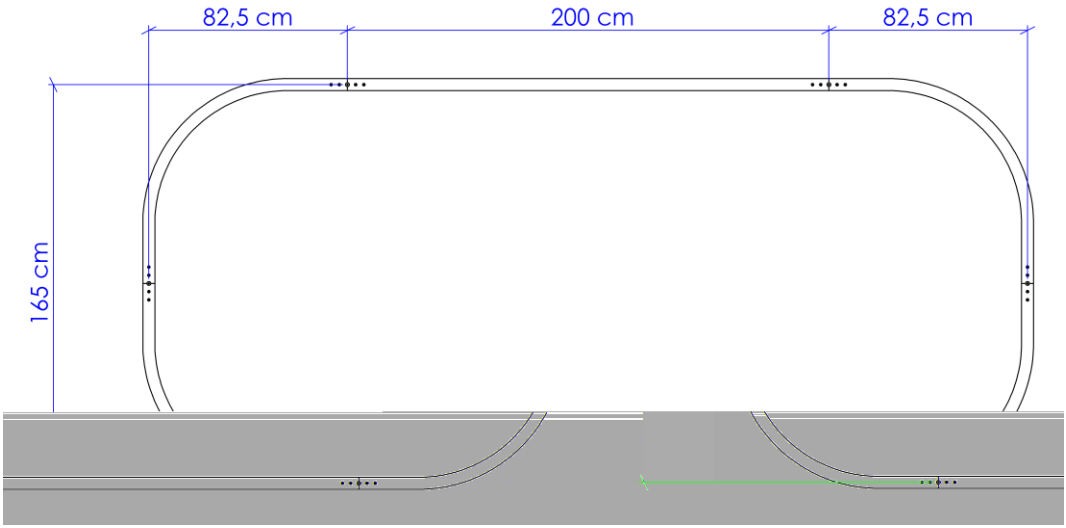
82,5 cm
200 cm
82,5 cm
165 cm

26

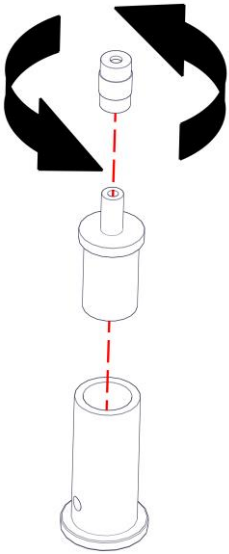

27

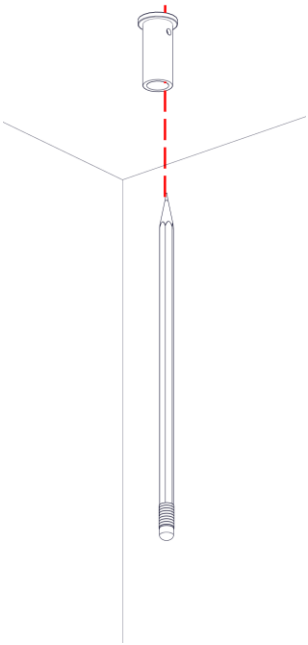

28

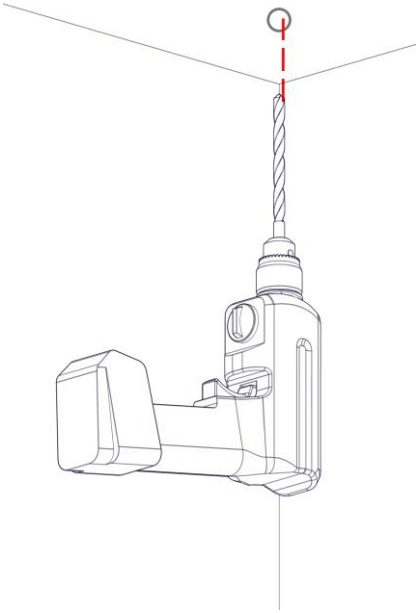

29

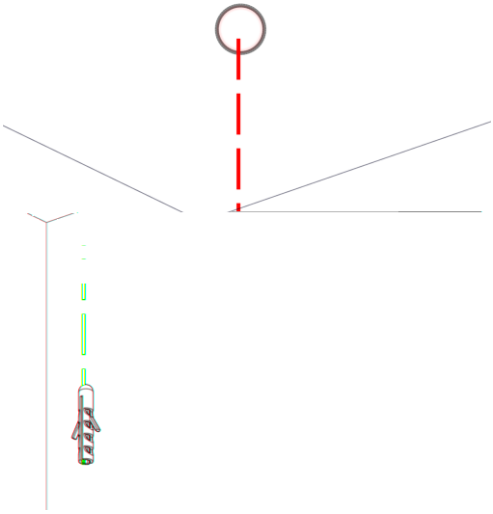

30

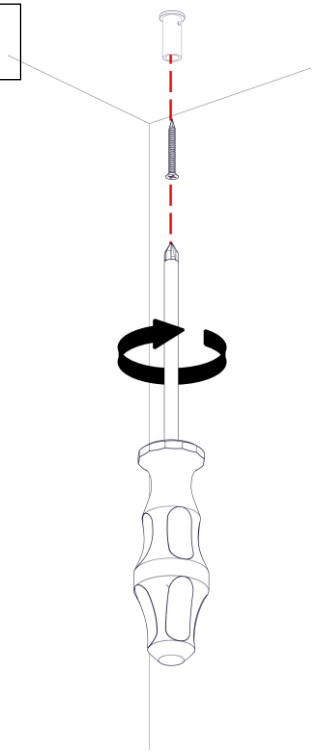

31

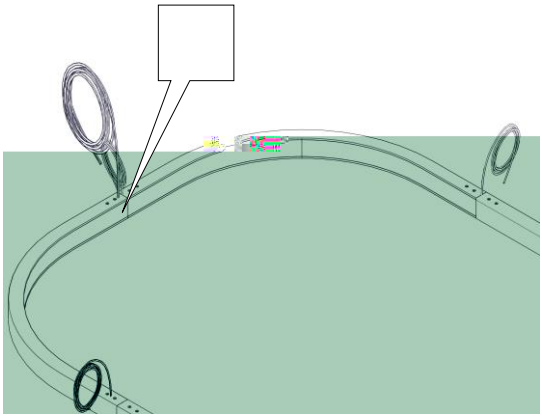

32

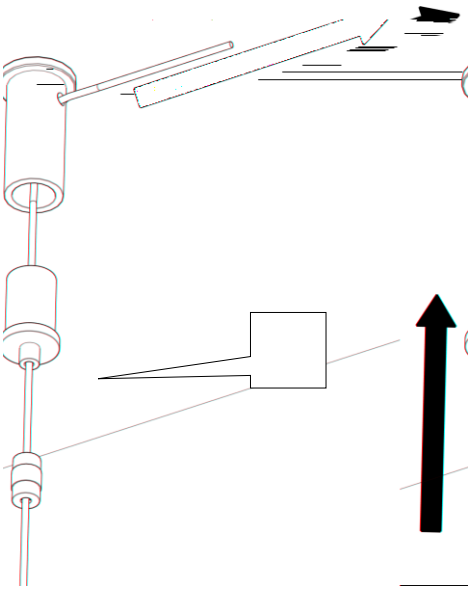

33

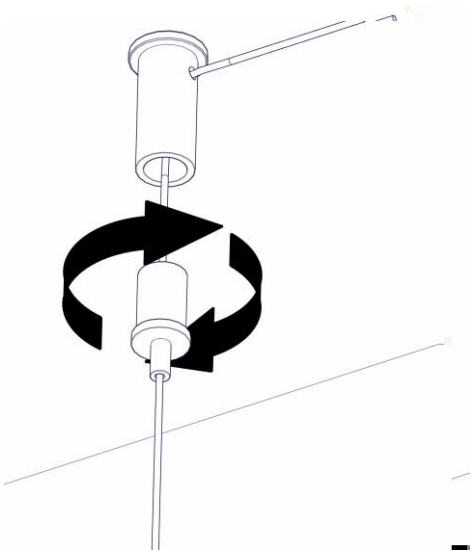

34

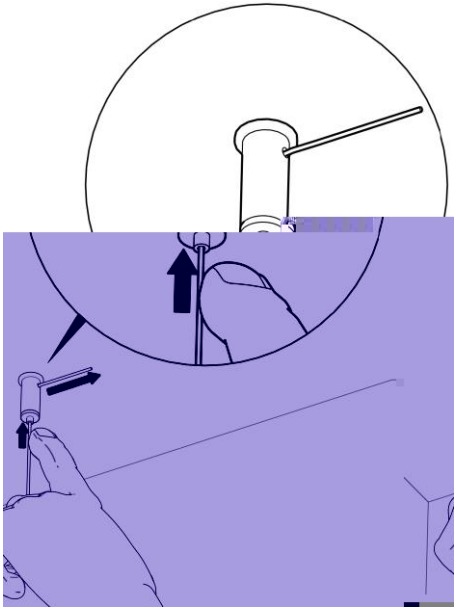

35

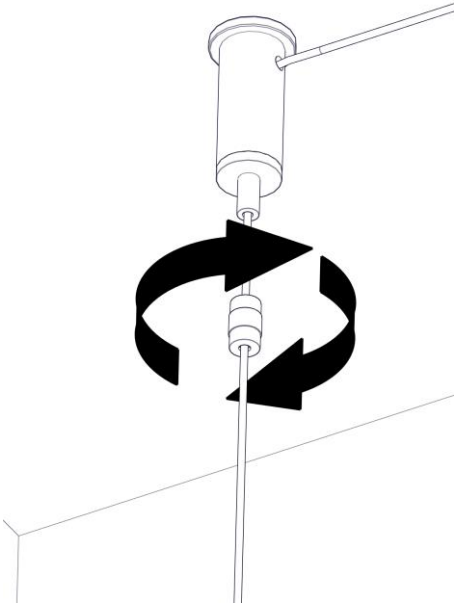

36

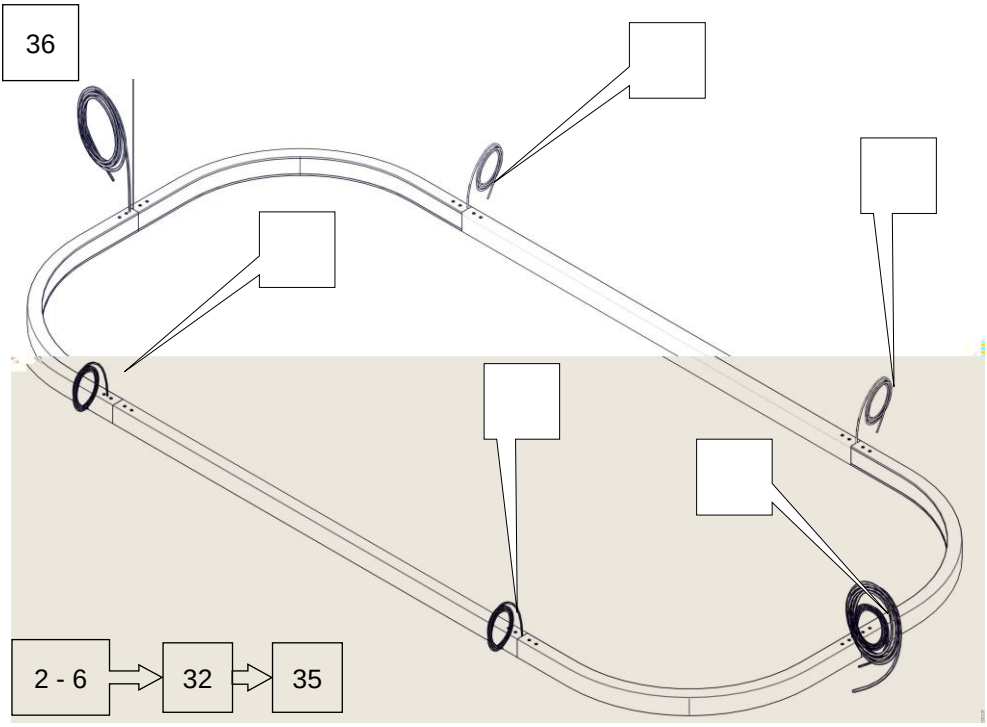

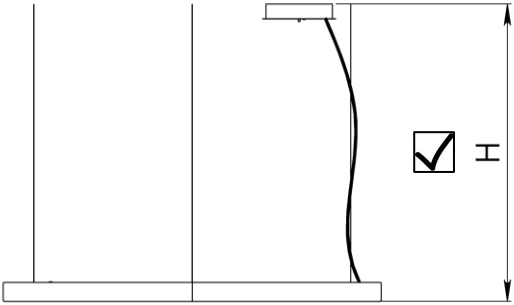

37

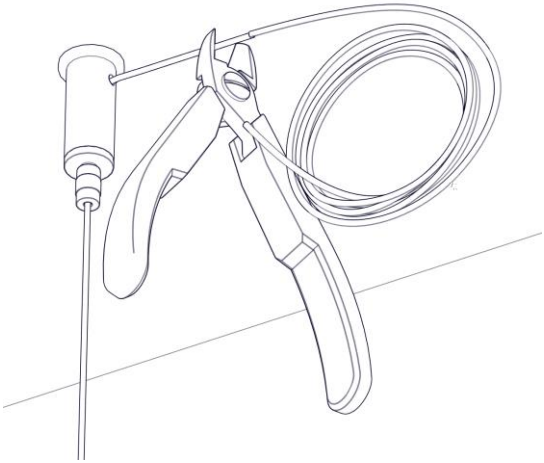

38

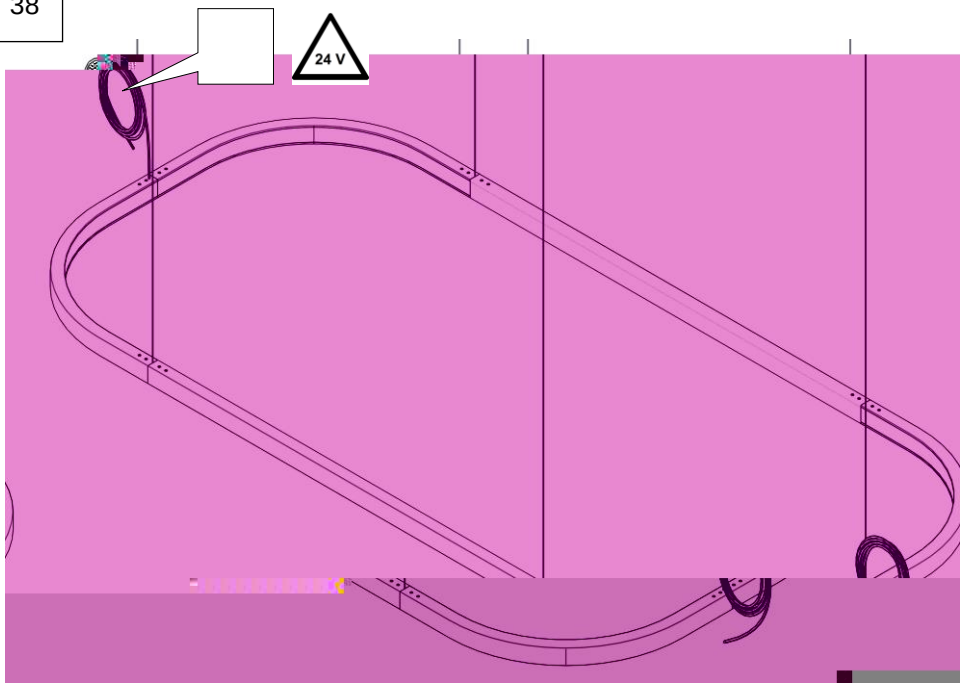

39

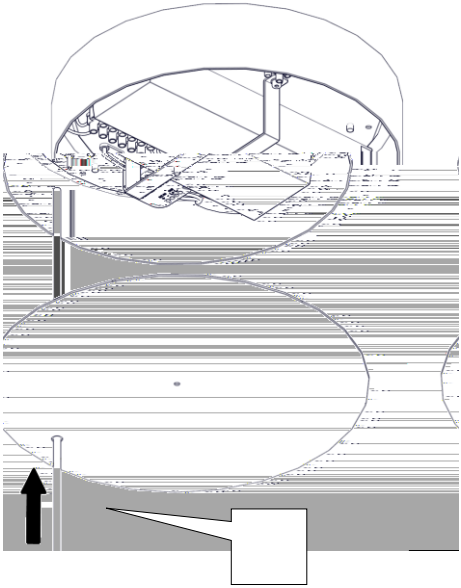

40

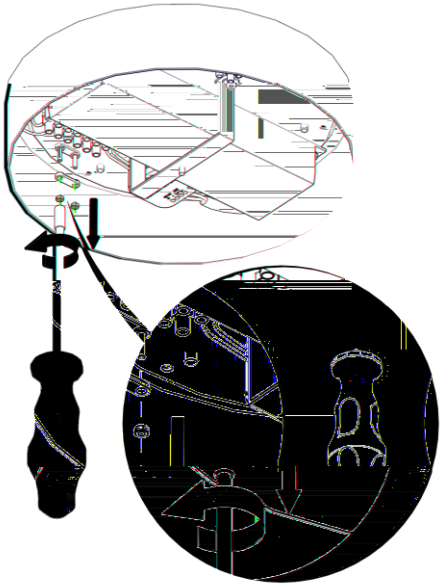

41

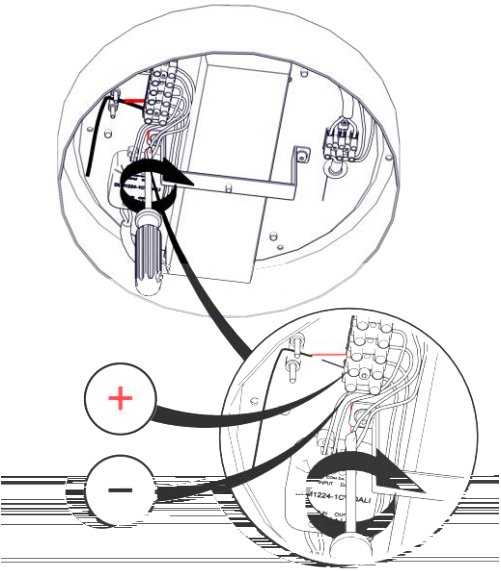

42

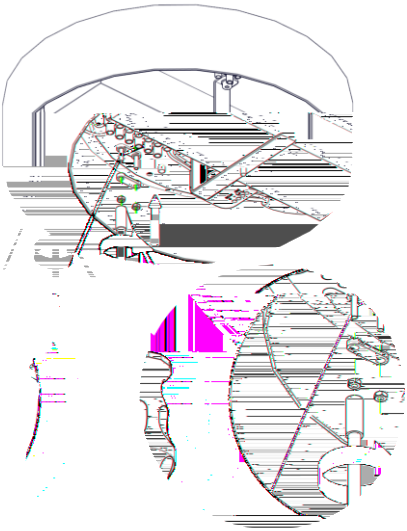

43

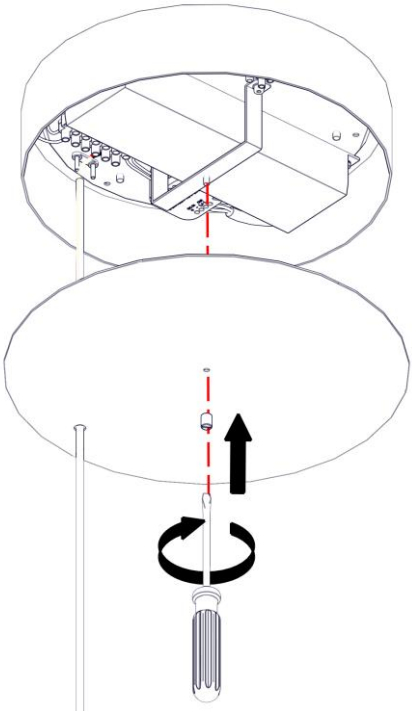

44

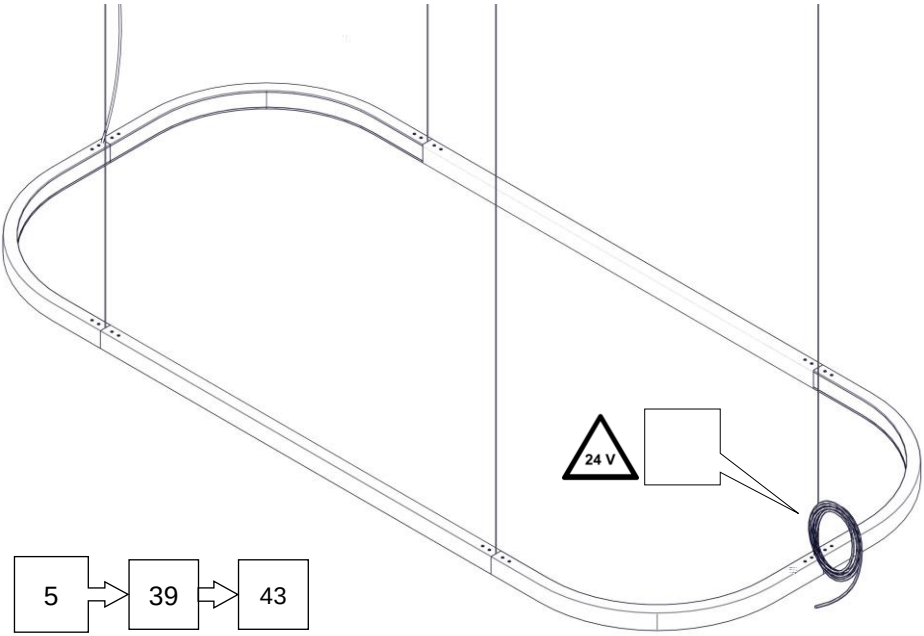

5 → 39 → 43

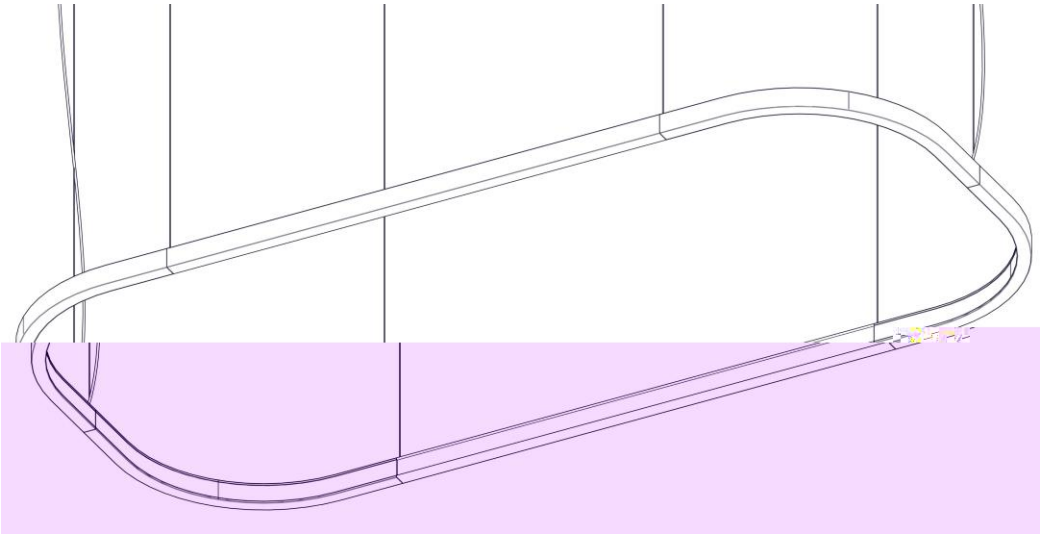

45

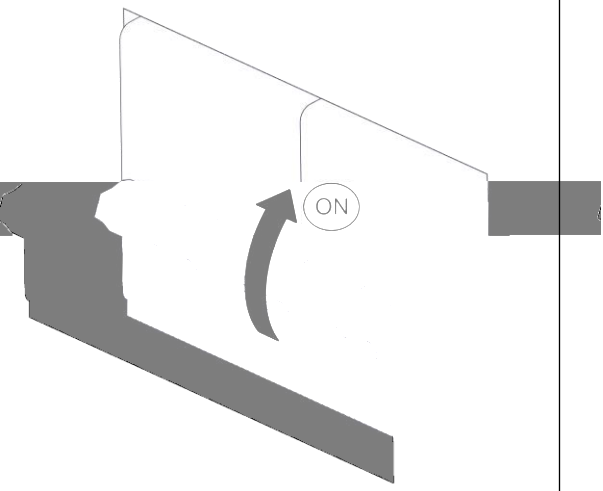

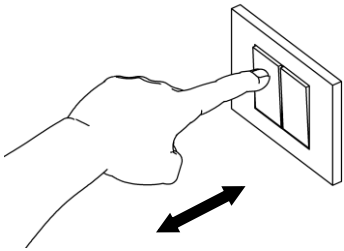

ON
OFF

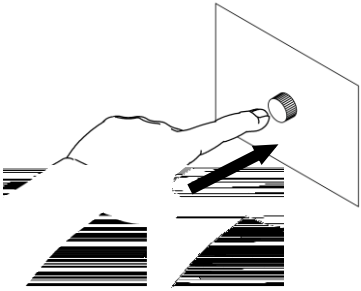

-
+

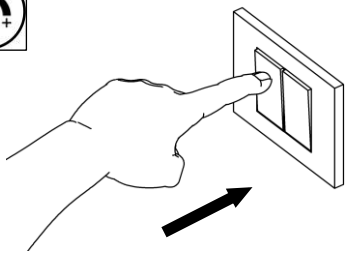

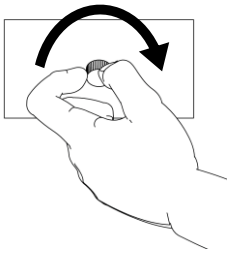

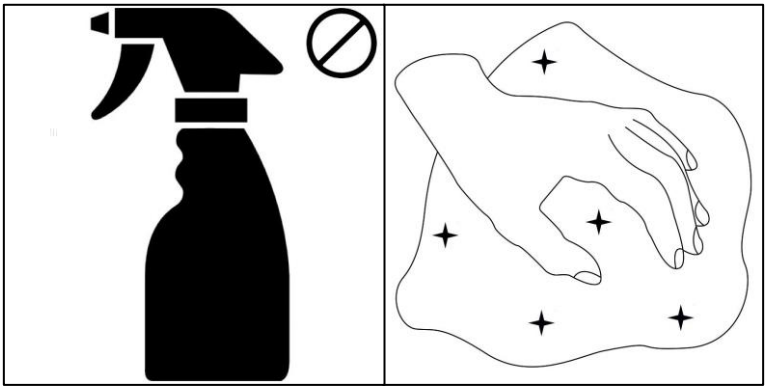

martinelli luce

Via Teresa Bandettini
55100 Lucca (Lu) Italy

Tel.+39/0583.418315
Fax. +39/0583.419003

www.martinelliluce.it
info@martinelliluce.it