40102
BORCHIA
Design Emiliana Martinelli

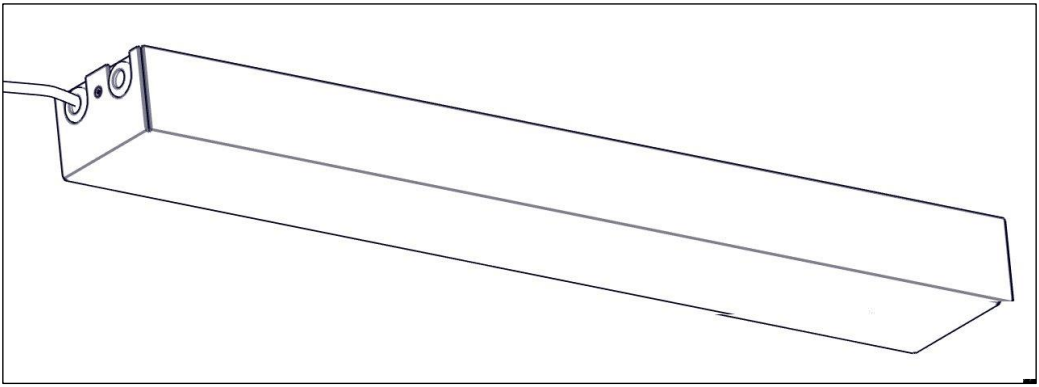

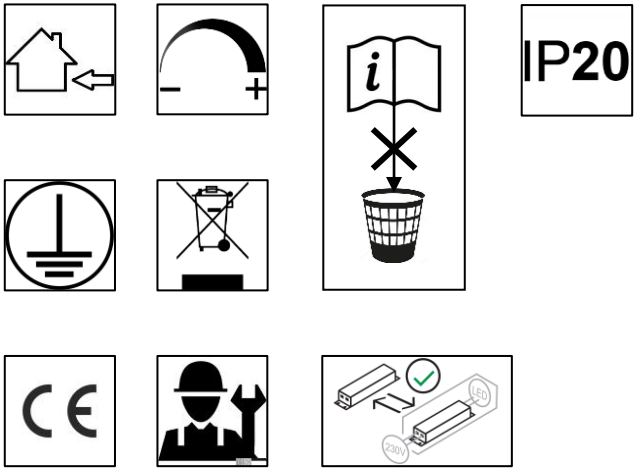
IP20
LED
230V

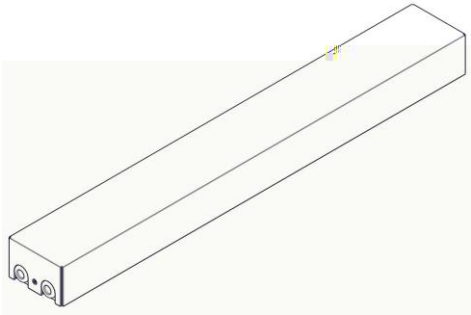

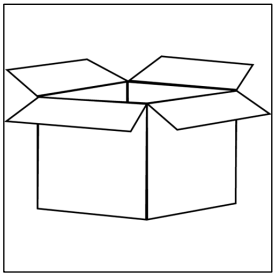

1

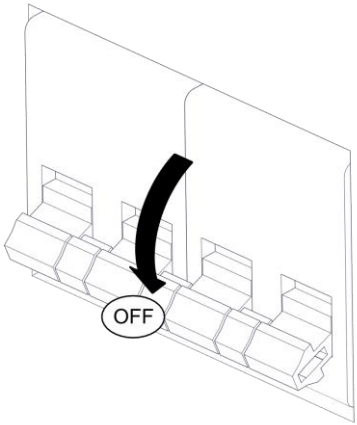

2

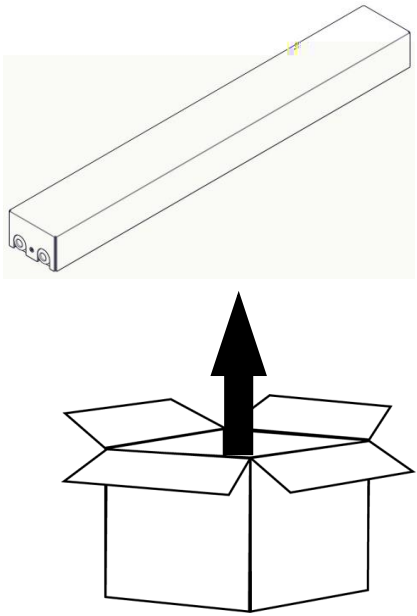

3

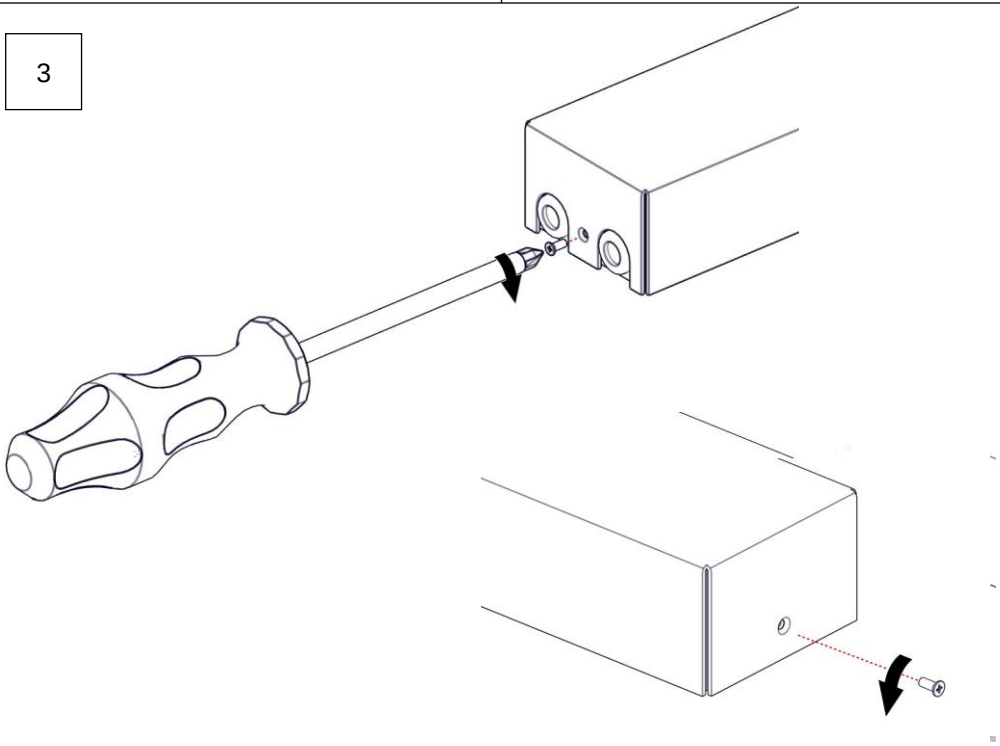

4

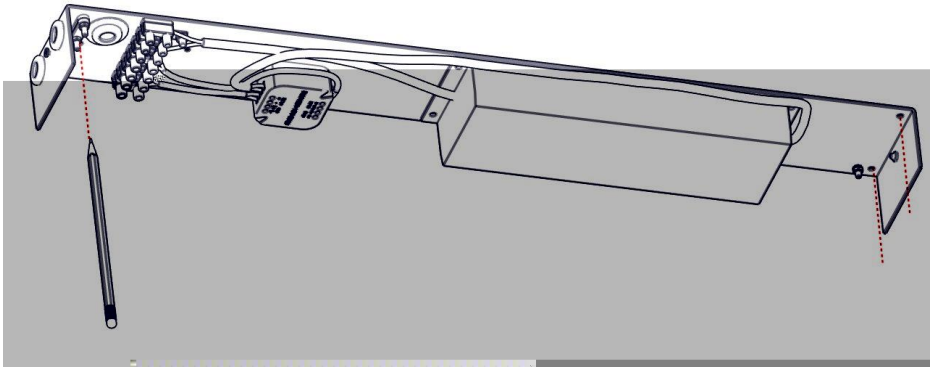

5

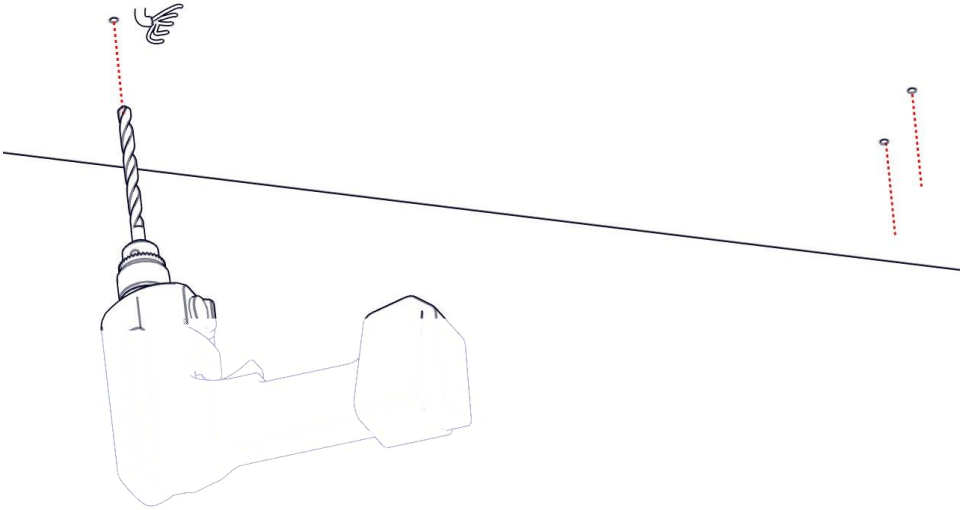

6

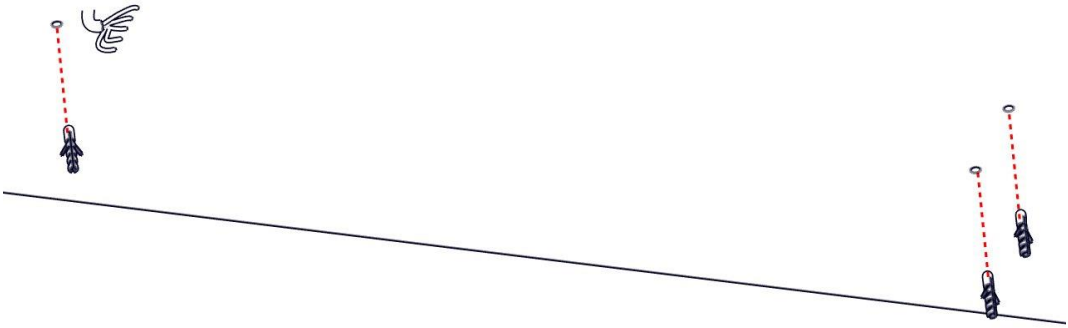

7

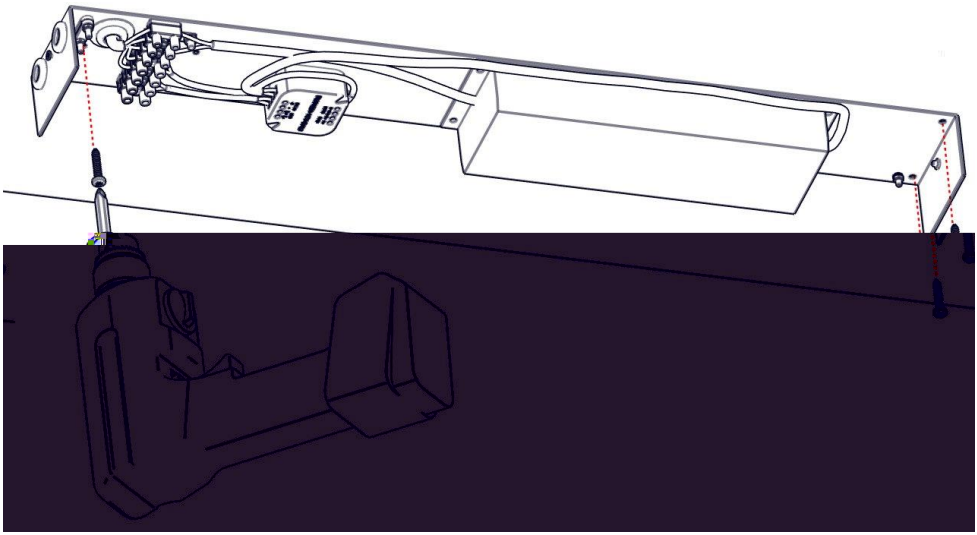

8 ! 9

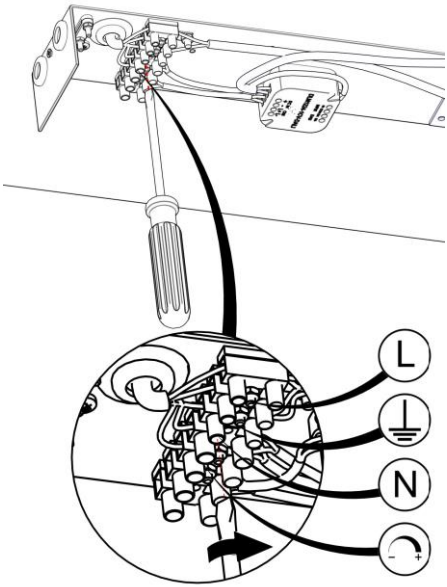
L
N

10

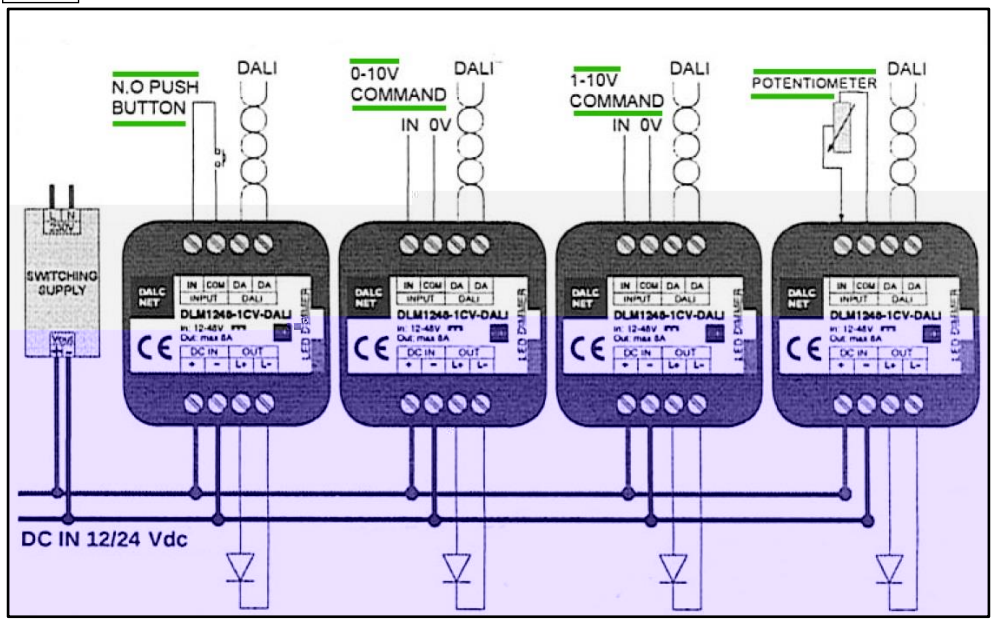
N.O PUSH BUTTON
DALI
0-10V COMMAND
IN 0V
DALI
1-10V COMMAND
IN 0V
DALI
POTENTIOMETER
DALI
SWITCHING SUPPLY
DLM1248-1CV-DALI
DC IN 12/24 Vdc

11

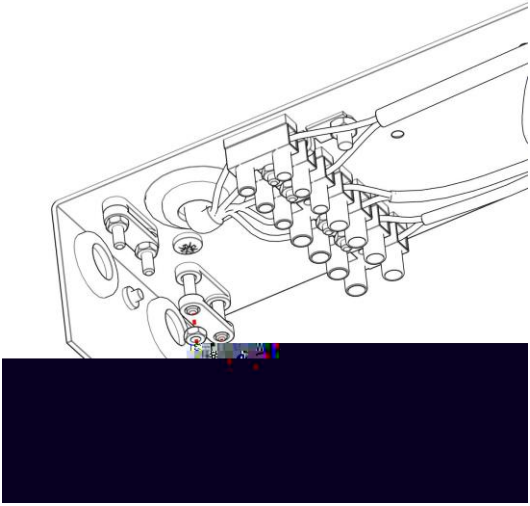

12

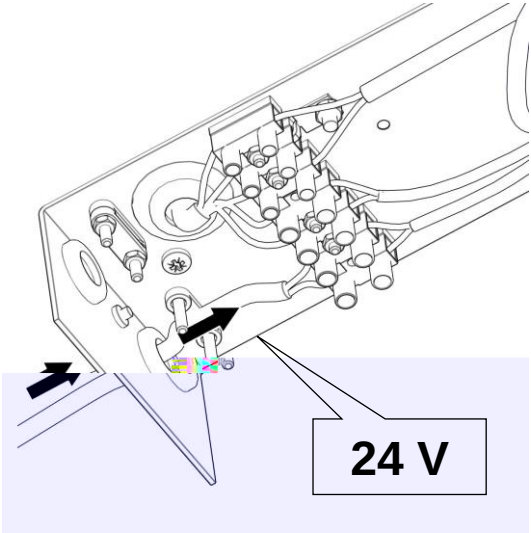

13

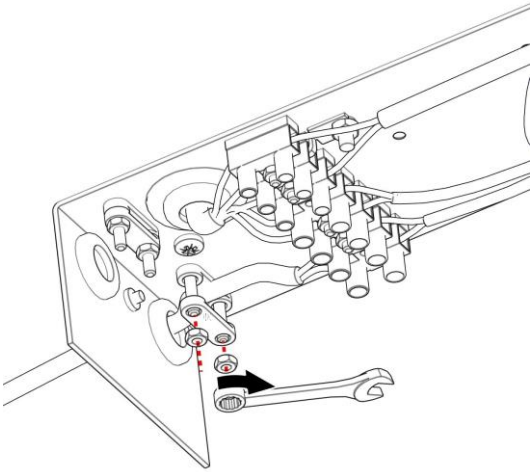

14

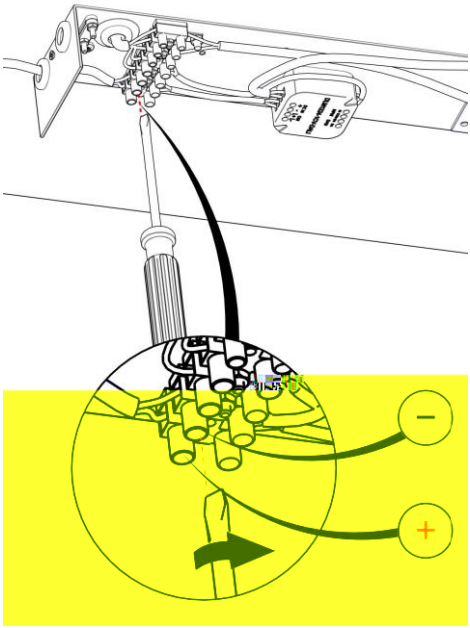

11

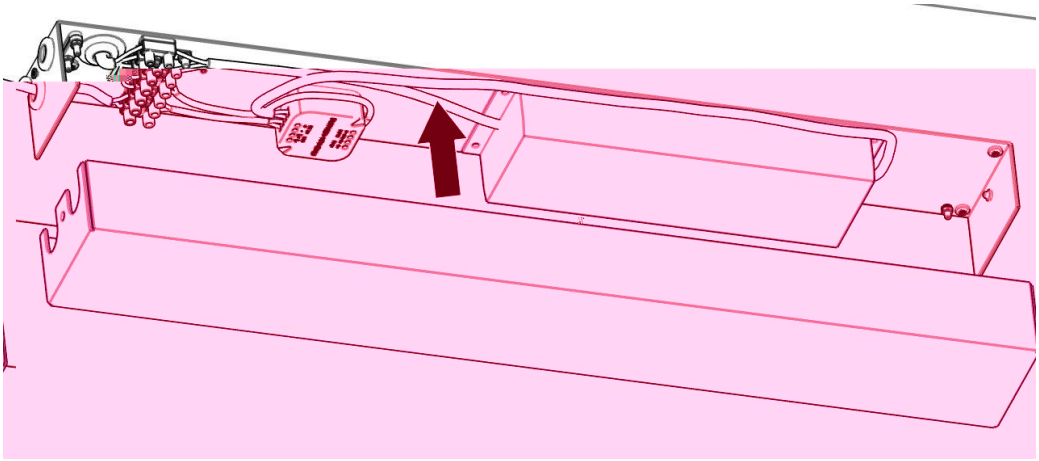

12

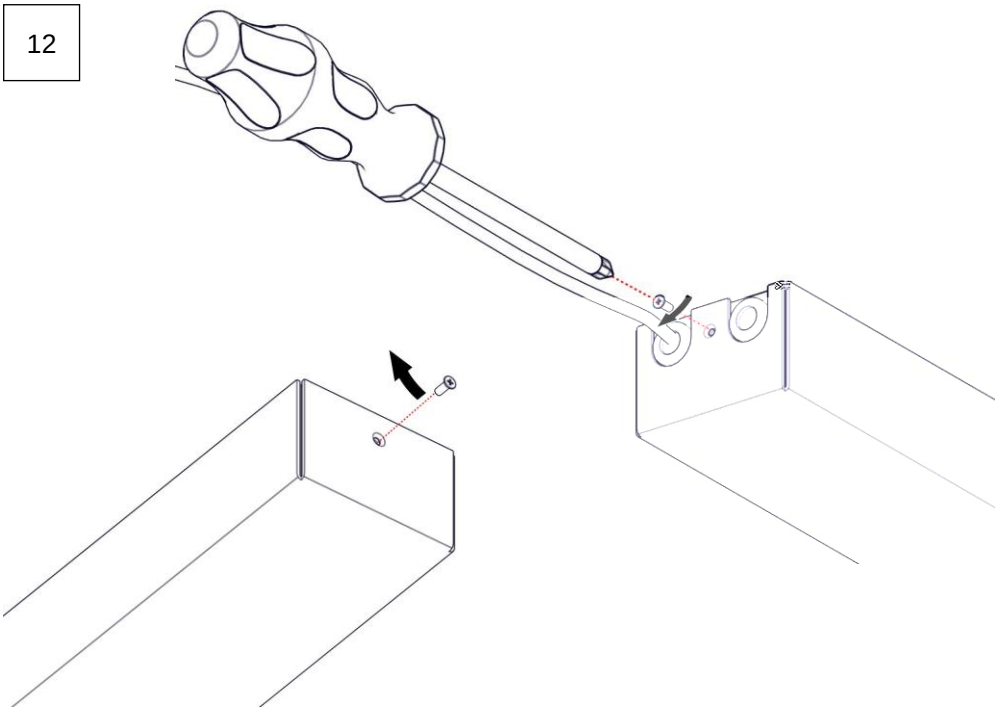

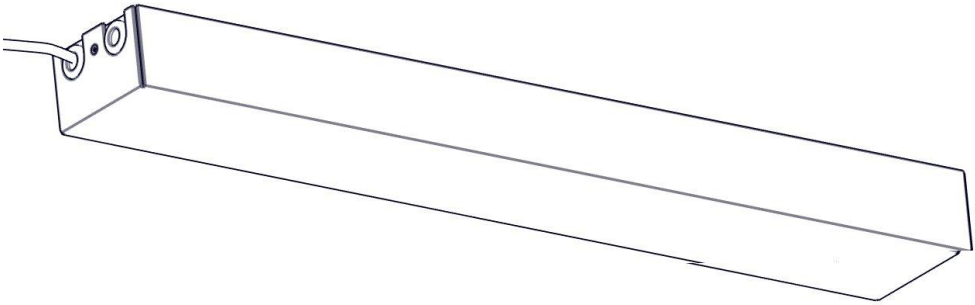

13

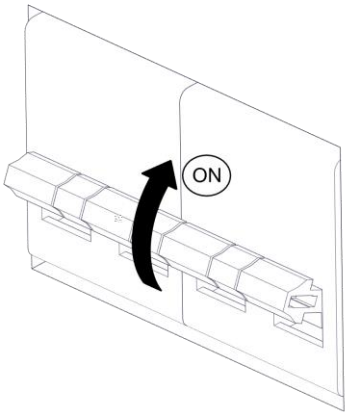

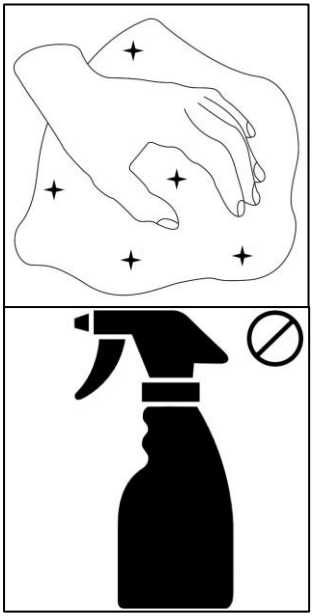

martinelli luce

Via Teresa Bandettini
55100 Lucca (Lu) Italy

Tel.+39/0583.418315
Fax. +39/0583.419003

www.martinelliluce.it
info@martinelliluce.it