S23

For 48 V track

Studio Tecnico ML

colors

Typology	Spotlight
Utilisation	Indoor

12 W 350 lm

direct light

Adjustable direct-light shaper spotlight with adapter for 48V or 230V electrified track. The polymethylmethacrylate lens group offer a precise control of the light beam. Painted aluminium structure. Ideal for museums and retail applications. Equipped with externally adjustable metal wings that allow the shape of the light beam to be shaped and adjusted for circular, square and rectangular shapes.

Family	S23
Typology	Spotlight
Utilisation	Indoor

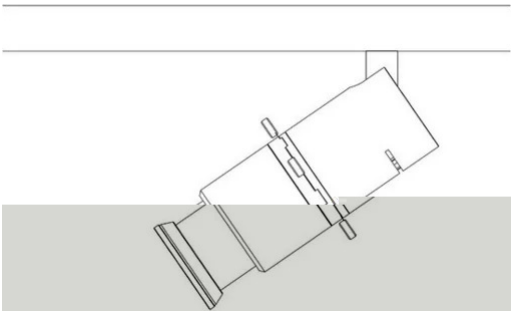

Dimensions

Lunghezza	14,5 cm
Diameter	5 cm
Weight	0.5 Kg

Materials

Watt	12 W
Lumen	350 lm
CRI	>90
Duration	50000 h
CCT	3000 K
Energy class	

Certifications

III IP20

EcoLabel

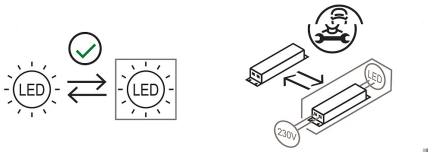

Colour variant code

2905/BI
White

2905/NE
Black

Gallery

Accessories

522
Driver 48 V

520
Electrified track

521
Electrified track

519
Electrified track

591J
Electrified track

592J
Electrified track

593J
Electrified track

526J
Hanging cable

525
Joint

524
Joint

544
Joint

523
Terminal head